ISSN 0970-3993

84
April
1990

elektor INDIA electronics

Rs. 10.00

Volume-8, Number-4
April-1990

Publisher: C.R. Chandarana
Editor: Surendra Iyer
Circulation & Advtg: J. Dhas
Production: C.N. Mithagari
Advertising: Punam T. Bhatt

Address:
ELEKTOR ELECTRONICS PVT. LTD.
52, C Proctor Road, Bombay-400 007 INDIA
Telex: (011) 76661 ELEK IN

OVERSEAS EDITIONS

Elektor Electronics (Publishing)
Down House, Broomhill Road,
LONDON SW18 4JQ
Editor: Len Seymour

Elektor sarl
Route Nationale; Le Seau; B.P. 53
59270 Bailleul – France
Editors: D R S Meyer;
G C P Raedersdorf

Elektor Verlag GmbH
Süsterfeld-Straße 25
5100 Aachen – West Germany
Editor: E J A Krempelsauer

Elektor EPE
Karaiskaki 14
16673 Voula – Athens – Greece
Editor: E Xanthoulis

Elektuur B.V.
Peter Treckpoelstraat 2-4
6191 VK Beek – the Netherlands
Editor: P E L Kersemakers

Electro-shop
35 Naseem Plaza
Lasbella Chawk
Karachi 5 – Pakistan
Manager: Zain Ahmed

Ferreira & Bento Lda.
R.D. Estefania, 31-1°
1000 Lisboa-Portugal
Editor: Jeremias Sequeira

Ingelek S.A.
Plaza República Ecuador
2-28016 Madrid – Spain
Editor: A M Ferrer

Electronic Press AB
Box 5505
14105 Huddinge – Sweden
Editor: Bill Cedrum

The Circuits are domestic use only. The submission of designs or articles implies permission to the publisher to alter and translate the text and design and to use the contents in other Elektor Publications and activities. The publishers cannot guarantee to return any material submitted to them. Material must be sent to the Holland address (given above). All drawings, photographs, printed circuit boards and articles published in elektor publications are copyright and may not be reproduced or imitated in whole or part without prior written permission of the publishers.

Patent protection may exist in respect of circuit devices, components etc. described in this magazine.

The publishers do not accept responsibility for failing to identify such patent or other protection.

THE INDIAN NEWSPAPER SOCIETY ★ NEW DELHI ★
MEMBER

Printed at : Trupti Offset Bombay - 400 013

Copyright © 1990 Elektuur B.V.

CONTENTS

Leader

Price war in 'PC' market 4.05

Special Features

Industry notes 4.12

Business briefs 4.13

Snippets 4.14

On the development front 4.17

Components

Temperature Compensation for LCD modules 4.46

Electrophonics

PROJECT: BBD sound effects unit 4.43

General Interest

PROJECT: Power line monitor 4.31

PROJECT: Surge suppressor 4.34

PROJECT: The digital model traiin Part 12 ..... 4.40

Nicads 4.49

Radio & Television

PROJECT: Video mixer part 3 ..... 4.19

PROJECT: Audio/video modulator 4.37

Test & Measurements

PROJECT: Square-wave generator 4.47

Information

Employment services 4.15

New products 4.58

Guide Lines

Switch board 4.57

Classified Ads 4.66

Corrections 4.66

Index of advertisers 4.66

VIDEO MIXER

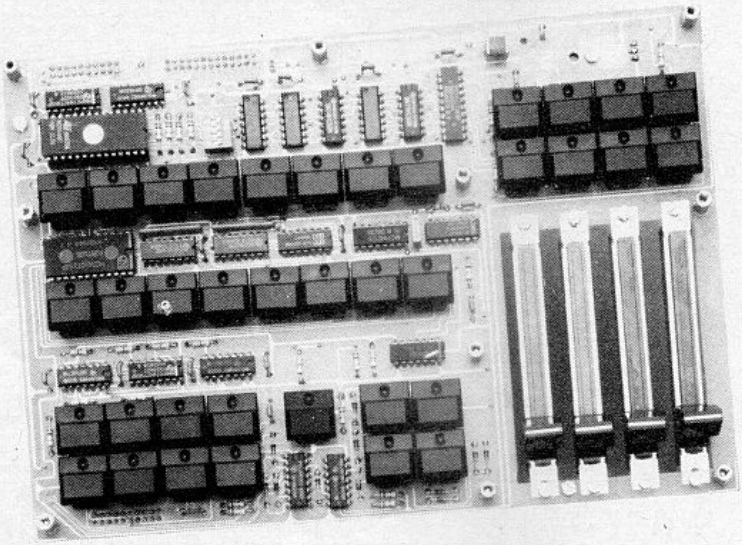

PART 3: KEYBOARD

A. Rigby & G. Dam

This penultimate instalment discusses the third module in the video mixer: the keyboard with its many switches and controls for picture mixing and special wipe effects.

The keyboard circuit forms the user interface of the video mixer. The block diagram in Fig. 11 shows the general structure. Each of the switches shown in a horizontal row roughly at the centre of the diagram has its own LED indicator. The switch states are demultiplexed to give two or, in some cases, four independent control signals. The diagram also shows that the output signals of switches S_5–S_{12} and S_{30}–S_{35} are synchronized to the VSYNC signal. This means that any action on the keyboard does not take effect until the VSYNC pulse is generated in the mixer. The synchronization eliminates unexpected switching effects occurring at random instants during the current raster.

The lower part of the block diagram contains an EPROM plus associated logic control circuits. The loading of state levels supplied by switches S_1–S_4 and S_{14}–S_{29} is synchronized by VSYNC to ensure that the effect associated with a particular switch becomes visible at the start of a new raster only.

After buffering, EPROM datalines D0–D5 are used direct in the mixer. Datalines D6 and D7, however, are first applied to a 1-of-4 decoder to give the required control signals SC15–SC18. The combination of control lines MC1–MC6 and buffered datalines D0–D5 provides a total of 64 different combinations, or 256 combinations if SC15–SC18 are added. Each combination represents a particular picture wipe or mixing effect.

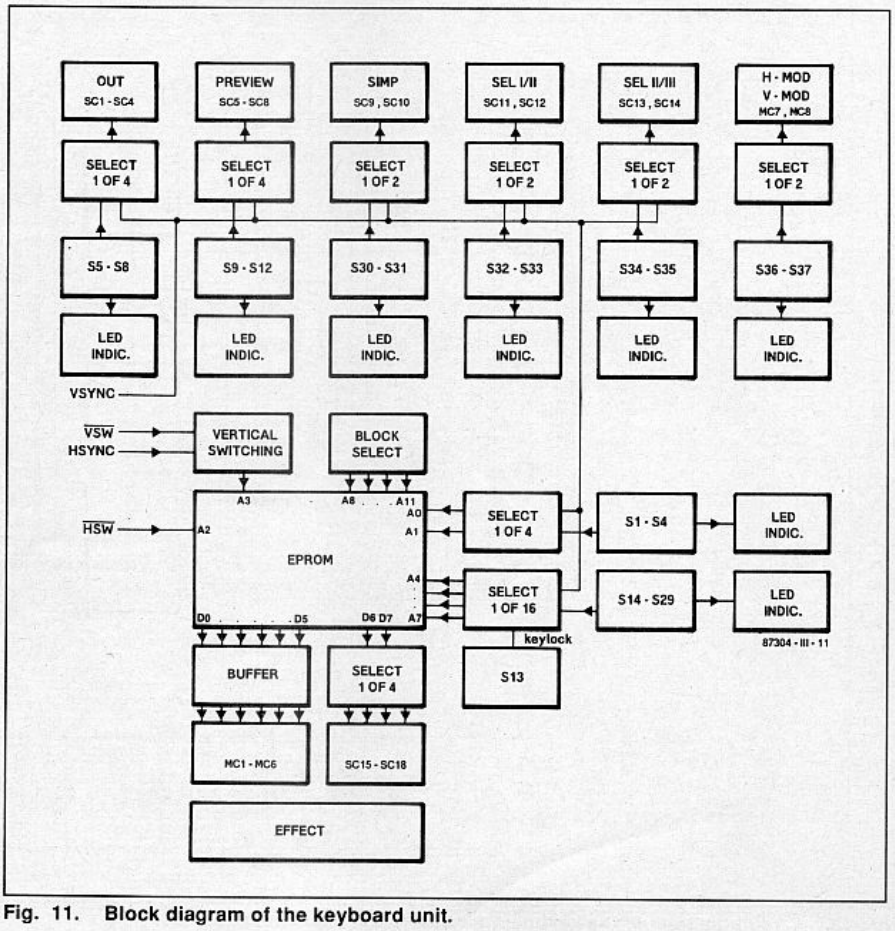

Fig. 11. Block diagram of the keyboard unit.

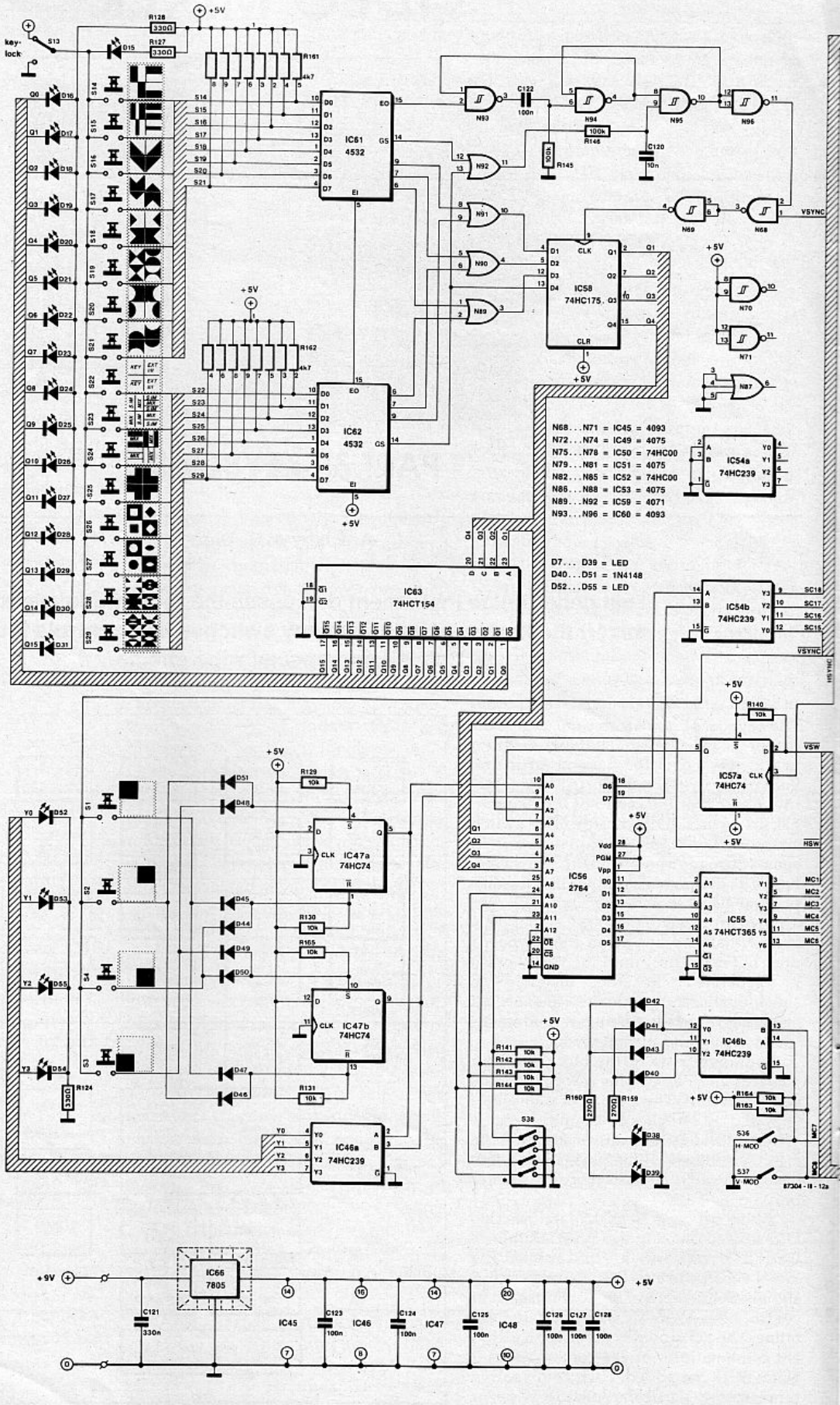

Fig. 12. Circuit diagram of the keyboard module in the video mixer.

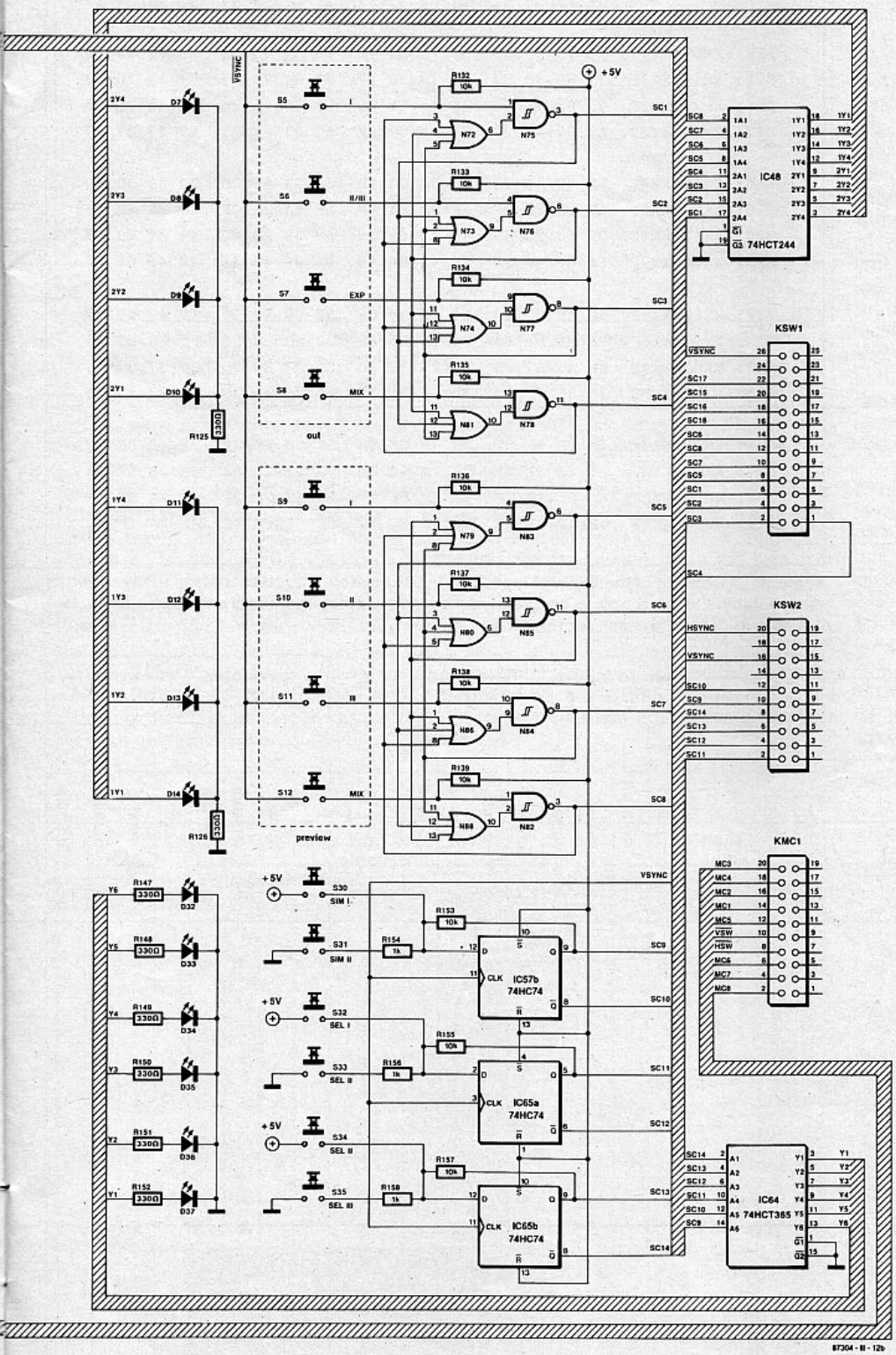
VSYNC
+5V
out
preview
IC48
74HCT244
KSW1
KSW2
KMC1
IC64
74HCT365
IC57b
74HC74
IC65a
74HC74
IC65b
74HC74
87304 - III - 12b

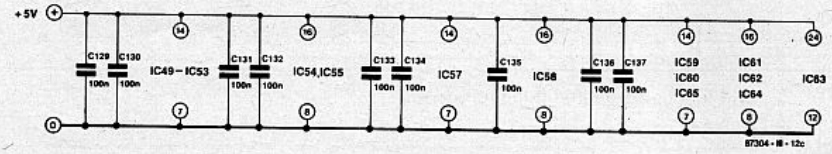
+5V
IC49 – IC53
IC54,IC55
IC57
IC58
IC59
IC60
IC61
IC62
IC63
IC64
IC65
87304 - III - 12c

Clearly, a total of 256 possible combinations results in an unwieldy number of effects. Therefore, a selection has been made on the basis of practical use. Obviously, this selection is subjective, but the user of the mixer is free to design and store his own set of effects, as discussed later.

In the basic version of the mixer, the EPROM contains only one of 16 possible banks of picture effects —up to 15 may be added as required. The effects obtained from the above selection are stored in the first bank of the EPROM, and may be called up by a total of 20 keys. The first keyboard area consists of 16 keys, S_{14}–S_{29}; while the second area consists of four keys, S_1–S_4. The latter allows the user to select one of four effects offered by one key from the first (20-key) area. If you find this difficult to follow, look at the front-panel lay-out (Fig. 14) which provides all the necessary information for effective control of the mixer.

As already stated, only a small part of the EPROM capacity is used, which leaves the user plenty of room to store new effects combinations. The possibilities and rules that apply to customizing the effects set are detailed further on in this article. The banks with custom-designed effects are accessed with the aid of the block select circuit.

Signals $\overline{VSW}$ and $\overline{HSW}$ are taken from the modulation board to ensure that all switching of video signals arranged by the EPROM runs synchronously with the vertical as well as the horizontal sync pulses.

Practical circuit

The circuit diagram of the keyboard circuit is given in Fig. 12. Although a sizeable circuit, it is the simplest in the video mixer.

Push-buttons S_5–S_8, like S_9–S_{12}, form a group of four switches of which only one is selected at a time. This selection is arranged by a combination of a NAND gate and a 3-input OR gate. Each switch has an associated activity LED which is driven by an output of buffer IC_{48}. The 8 switching signals supplied by S_5–S_{12} leave the PCB via connector KSW_1.

Switches S_1–S_4 provide the two address signals A0 and A1 which select EPROM-resident effects and patterns. Switches S_{30}–S_{35} are alternately connected to ground or the positive supply rail. Actuation of one of these switches is recorded by the bistable that follows it. The bistables are configured as set-reset (S/R) types whose output signals are fed direct to other parts of the circuit as well as to buffer IC_{64} which drives five switch-status LEDs.

The two ICs in the top left-hand corner of the circuit, IC_{61} and IC_{62}, form a priority encoder for switches S_{14}–S_{29}. If one of the eight encoder inputs is made high, the output supplies the binary value of the number of the relevant input. If two keys are pressed simultaneously, the highest value is passed to the output. Since two independent decoders are used, IC_{61} and

	S1	S2	S3	S4	S1	S2	S3	S4	S1	S2	S3	S4	S1	S2	S3	S4
S14: XX00-XX0F	75	75	35	35	35	75	35	75	75	35	75	35	35	35	75	75
S15: XX10-XX1F	77	7D	3D	37	37	7D	3D	77	77	3D	7D	37	37	3D	7D	77
S16: XX20-XX2F	65	05	45	25	25	45	05	65	65	05	45	25	25	45	05	65
S17: XX30-XX3F	67	07	47	27	27	47	07	67	67	07	47	27	27	47	07	67
S18: XX40-XX4F	6D	0D	4D	2D	2D	4D	0D	6D	6D	0D	4D	2D	2D	4D	0D	6D
S19: XX50-XX5F	6F	6A	2A	2F	2F	2A	6A	6F	6F	6A	2A	2F	2F	2A	6A	6F
S20: XX60-XX6F	09	69	29	49	49	29	69	09	09	69	29	49	49	29	69	09
S21: XX70-XX7F	66	06	46	26	26	46	06	66	66	06	46	26	26	46	06	66
S22: XX80-XX8F	50	40	00	10	10	00	40	50	50	00	40	10	10	40	00	50
S23: XX90-XX9F	B5	BD	F5	F5	F5	BD	F5	B5	B5	FD	B5	F5	F5	FD	B5	B5
S24: XXA0-XXAF	BD	B7	B7	BD	BD	37	77	BD	3D	B7	B7	7D	3D	37	77	7D
S25: XXB0-XXBF	35	35	75	35	35	35	35	75	35	75	35	35	75	35	35	35
S26: XXC0-XXCF	7F	0F	4F	3F	3F	4F	0F	7F	3F	0F	4F	7F	3F	4F	0F	7F
S27: XXD0-XXDF	0A	6E	2E	4A	4A	2E	6E	0A	0A	6E	2E	4A	4A	2E	6E	0A
S28: XXE0-XXEF	6F	6F	2F	2F	6F	2F	6F	2F	6F	6E	2E	2F	2F	2E	6E	6F
S29: XXF0-XXFF	0E	6E	2E	4E	4E	2E	6E	0E	0F	6F	2F	4F	4F	2F	6F	0F

Table 1. Content of the EPROM type 2764 in the keyboard circuit. Analyze the function of each databyte to learn how to program your own set of picture mixing and wipe effects. Use the data in Table 2 (below) for reference.

		Mixed inputs bits: D7-D6				Reference bits: D5-D4					V-waveform bits: D3-D2				H-waveform bits: D1-D0			
	High nibble	input I	input II/III	mixed	superimpose	invert	normal	slide pot	vertical	Low nibble	key	ramp	parabola	triangle	key	ramp	parabola	triangle
Bin.	D7–D4	00	01	10	11	D5	D5	D4	D4	D3–D0	00	01	10	11	00	01	10	11
00 00	0	x				x			x	0	x				x			
00 01	1	x				(x)		x		1	x					x		
00 10	2	x					x		x	2	x						x	
00 11	3	x					(x)	x		3	x							x
01 00	4		x			x			x	4		x			x			
01 01	5		x			(x)		x		5		x				x		
01 10	6		x				x		x	6		x					x	
01 11	7		x				(x)	x		7		x						x
10 00	8			x		x			x	8			x		x			
10 01	9			x		(x)		x		9			x			x		
10 10	A			x			x		x	A			x				x	
10 11	B			x			(x)	x		B			x					x
11 00	C				x	x			x	C				x	x			
11 01	D				x	(x)		x		D				x		x		
11 10	E				x		x		x	E				x			x	
11 11	F				x		(x)	x		F				x				x

x = function selected.

(x) = function selected but overridden.

Table 2. Correlation between EPROM content and picture mixing effects.

```
S14 0000: 75 75 35 35 35 75 35 75 75 35 75 35 35 35 75 75
          ↓  ↓  ↓  ↓  ↓  ↓  ↓  ↓  ↓  ↓  ↓  ↓  ↓  ↓  ↓  ↓
          S1 S2 S4 S3 S1 S2 S4 S3 S1 S2 S4 S3 S1 S2 S4 S3

          ¦---------¦ ¦---------¦ ¦---------¦ ¦---------¦
            HSW = 0     HSW = 1     HSW = 0     HSW = 1
          ¦---------------------¦ ¦---------------------¦
                 VSW = 0                 VSW = 1
                                                 87304-III-T3
```

Table 3. Sixteen bytes are reserved for each switch in keyboard area 1. Use the data in Table 2 to establish the associated mixer functions.

IC_{62} are cascaded via their EI/EO (enable in/out) pins. This ensures that IC_{61} is disabled if one of the keys S_{21}–S_{29} is pressed.

The outputs of the priority encoder are connected to a 4-bit latch, IC_{58}, via three OR gates. The fourth data input of the latch is connected to the GS (group select) output of IC_{62}. As a result, IC_{58} supplies a 4-bit key identification code. Gates N_{93}–N_{96} suppress key bounce pulses and other interference. The 4-bit key code is fed direct to address inputs A4–A7 of the EPROM. Address inputs A8–A11 are given their respective levels by DIL switch block S_{38}. Address line A12 is grounded, so that only the lower 4 Kbyte of the EPROM is used. The EPROM through the Readers Services, all switches in S_{38} must be closed. Alternatively, four wire links may be installed.

EPROM address line A3 is connected to the $\overline{VSW}$ signal. Bistable IC_{57a} ensures that level changes of the $\overline{VSW}$ signal are synchronized to the line-sync signal to prevent video source switching in the current picture line.

Address line A2 is switched by the $\overline{HSW}$ signal, while the levels of A0 and A1 are determined by switches S_1–S_4. The relation between the EPROM address and the effect on the picture is discussed further on.

Construction

The last module of the video mixer desk consist of two printed-circuit boards which are available ready-made as one piece through the Readers Services. The PCB is double-sided and through-plated. First, use a jig-saw to cut out the part which is to hold the mains transformer and the two PCB terminal blocks. The edges of this part of the board are indicated by holes.

Mount the transformer and the terminal blocks on the supply board and put it aside for fitting into the enclosure later.

The hole in the keyboard PCB created by removing the supply board forms a clearance for the slide potentiometers.

Mount the following parts at the EPS side of the board: IDC cable headers KSW_1, KSW_2 and KMC_1, and voltage regulator IC_{66}.

Be sure to observe the opposite orientation of SIL resistor arrays R_{162} and R_{163}.

Switches S_{13}, S_{36} and S_{37} are self-locking types.

In some cases, the size of C_{12} forces this capacitor to be mounted at the EPS side of the board.

Since the LEDs are integral to the switches, these parts are mounted at the same time.

To reduce cost, all ICs, except the EPROM, may be mounted without sockets.

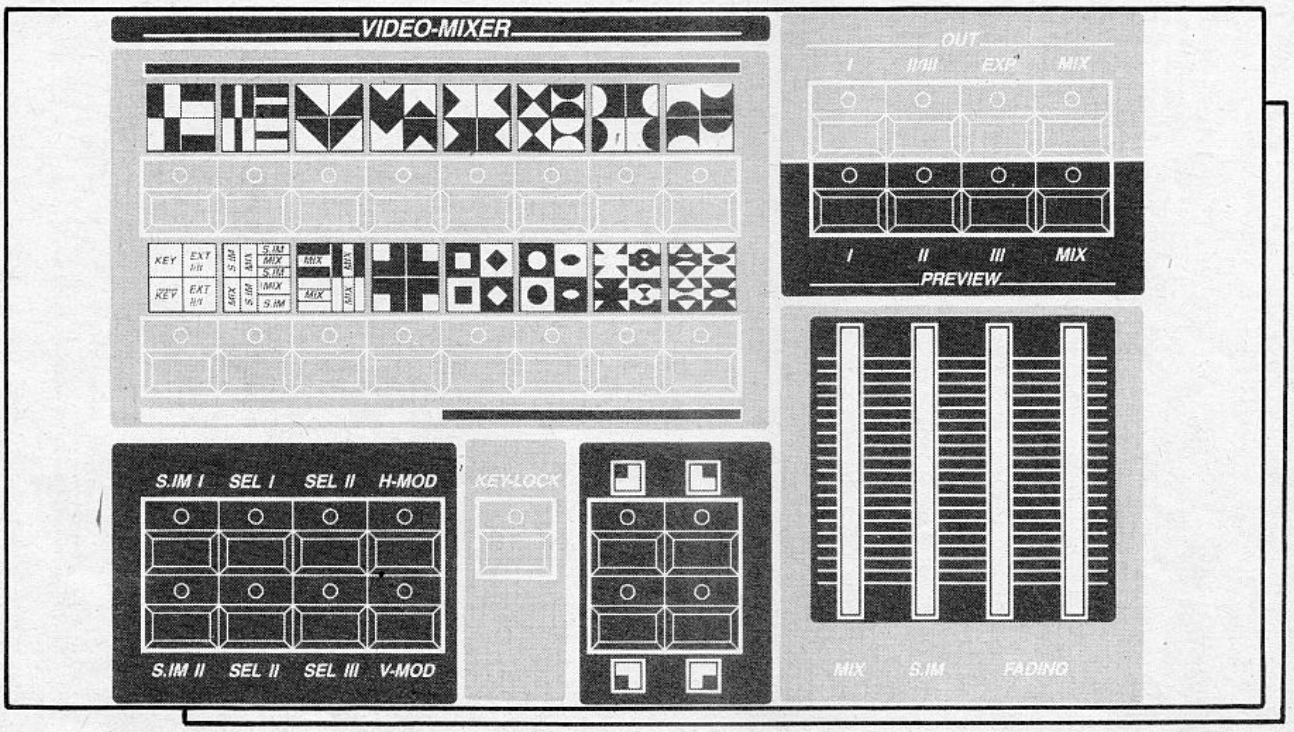

Fig. 13. Front-panel lay-out shown at approximately 30% of true size.

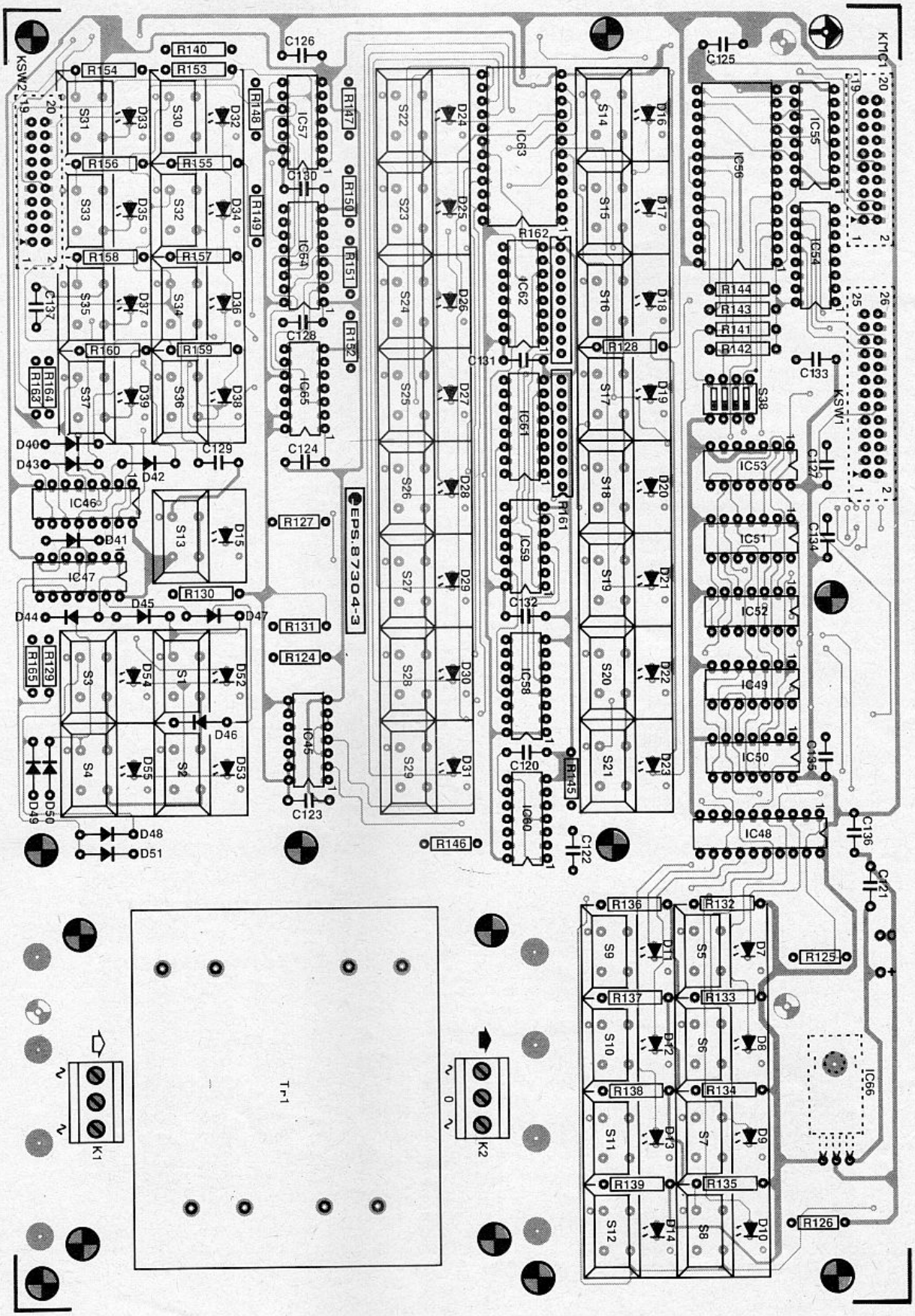

Fig. 14. Component mounting plan for the double-sided, through-plated keyboard PCB. Note that the transformer section is cut out.

COMPONENTS LIST

Resistors:
R_{124}–R_{128};R_{147}–R_{152} = 330Ω
R_{129}–R_{144};R_{153};R_{155};R_{157};R_{163};R_{164};
R_{165} = 10k
R_{145};R_{146} = 100k
R_{154};R_{156};R_{158} = 1k0
R_{159};R_{160} = 270Ω
R_{161};R_{162} = 4k7 (8-way SIL resistor array)

Capacitors:
C_{122}–C_{137} = 100n
C_{120} = 10n
C_{121} = 330n

Semiconductors:
IC_{45};IC_{60} = 4093
IC_{46};IC_{54} = 74HC239
IC_{47};IC_{57};IC_{65} = 74HC74
IC_{48} = 74HCT244
IC_{49};IC_{51};IC_{53} = 4075
IC_{50};IC_{52} = 74HC00
IC_{55};IC_{64} = 74HCT365
IC_{56} = 2764 (order number 5861; see Readers Services page)
IC_{58} = 74HC175
IC_{59} = 4071
IC_{61};IC_{62} = 4532
IC_{63} = 74HCT154
IC_{66} = 7805
D_7–D_{39};D_{52}–D_{55} = LED (in switches S_1–S_{37})
D_{40}–D_{51} = 1N4148

Miscellaneous:
S_1–S_{12};S_{14}–S_{35} = push-button with integral red LED (Dataswitch 61-10404010*).
S_{13};S_{36};S_{37} = toggle switch with integral red LED (Dataswitch 61-20404010*).
S_{38} = 4-way DIP switch block.
Tr_1 = mains transformer 2×9 V/2×9 VA)
K_1;K_2 = 3-way PCB terminal block.
KMC_1;KSW_2 = 20-way PCB header.
KSW_1 = 26-way PCB header.
Qty. 2: 26-way IDC plug.
Qty. 4: 20-way IDC socket.
Qty. 1: 25 cm 20-way flatcable
Qty. 1: 40 cm 20-way flatcable
Qty. 1: 60 cm 26-way flatcable
Enclosure: e.g., ESM EP30/20+
PCB Type 87304-3

Front-panel foil Type 87304-F

* ITW Switches • Division of ITW Limited • Norway Road • Hilsea • PORTSMOUTH PO3 5HT. Telephone: (0705) 694971.

+ ESM • 119 Rue des Fauvelles • 92400 Courbevoie • France. Telephone +33 1 47.68.50.98. Telex: 630612.

The remainder of the construction is straightforward. Work accurately and use little solder to prevent short-circuits. Always remember that fault-finding in a circuit like this can be costly and time-consuming.

Custom effects: over to you

Table 1 shows the structure of the contents of the EPROM Type 2764 for this project. The 8 databits of the EPROM control a number of functions of the mixing desk. The relations between the bits and the functions are summarized in Table 2. The two least-significant bits, D0 and D1, select one of four horizontal effects voltages. Similarly, D2 and D3 select one of four vertical effects voltages. Databits D4 and D5 select the source that determines the horizontal reference voltage for the switching of HSW: this source is either the vertical effects voltage or the horizontal wipe potentiometer. Databit D5 controls the inversion of the picture. The two most-significant databits, D7 and D8, select the input signal source. The table and the bit assignment should enable you to analyse the function of each databyte in the 'standard' EPROM fairly quickly.

The logic levels present at the EPROM address inputs determine which of the databytes is applied to the EPROM datalines. This address emanates from switches S_1–S_4 and S_{14}–S_{29}, and the HSW and VSW signals. The functions of the entries in Table 2 are explained below. First, however, assume that the remaining address lines are low.

The table contains 16 lines, one for each effect switch in area 1. The remaining address locations in the 'standard' EPROM are empty. Each line invariably contains 16 bytes, each of which can be selected individually by applying the relevant address. Table 3 lists the functions of all variables. If, for instance, switches S_1 and S_{14} are pressed (horizontal wipe), the first byte in the EPROM is initially put on the databus. Write down the binary structure of the byte. From Table 2, it is analyzed as follows:

- Input II/III is used;
- the horizonal reference voltage is supplied by the potentiometer;
- the horizontal effects voltage is a ramp;
- the vertical effects voltage is a ramp.

When HSW is active —as a result of the horizontal ramp exceeding the reference level set with the potentiometer —the fifth byte is applied to the databus. Again referring to Table 2, input 1/2 is selected. This mode causes a horizontal wipe effect with the position of the picture transition being determined by the slide potentiometer for the horizontal effects.

The function of the EPROM-based control words is similar for the vertical effects (assume that S_2 and S_4 are pressed). Designing and storing one's own picture effects is not simple. The tables and analysis of the 'default' effects in the EPROM, however, should provide sufficient information to get you started.

The last instalment of this article will appear in next month's issue of *Elektor Electronics India*. Parts 1 and 2 appeared in the February & March 1990 issue respectively.

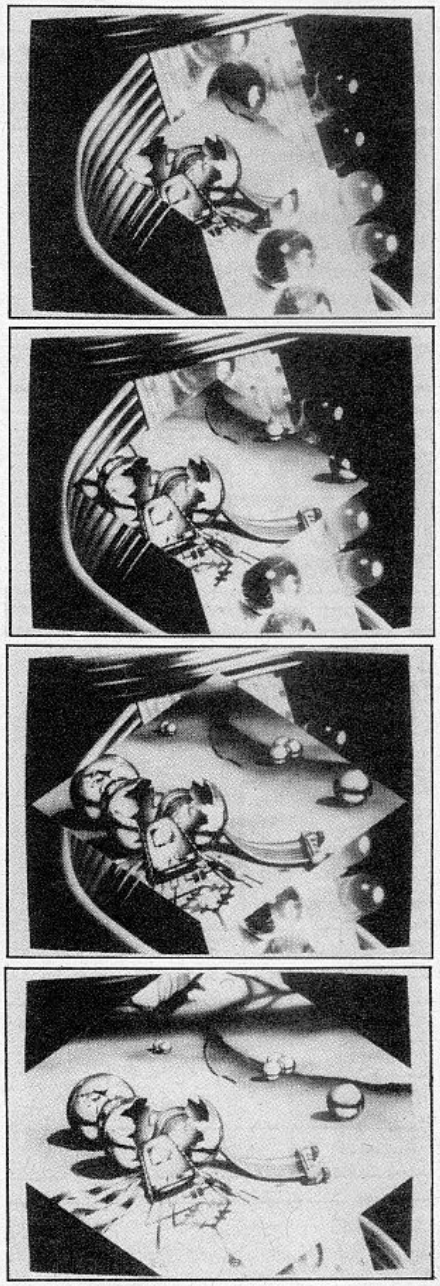

Fig. 15. Example of a picture-mixing effect in four stages.

PLOTTER MARK-II

with a contribution by B. Lewetz

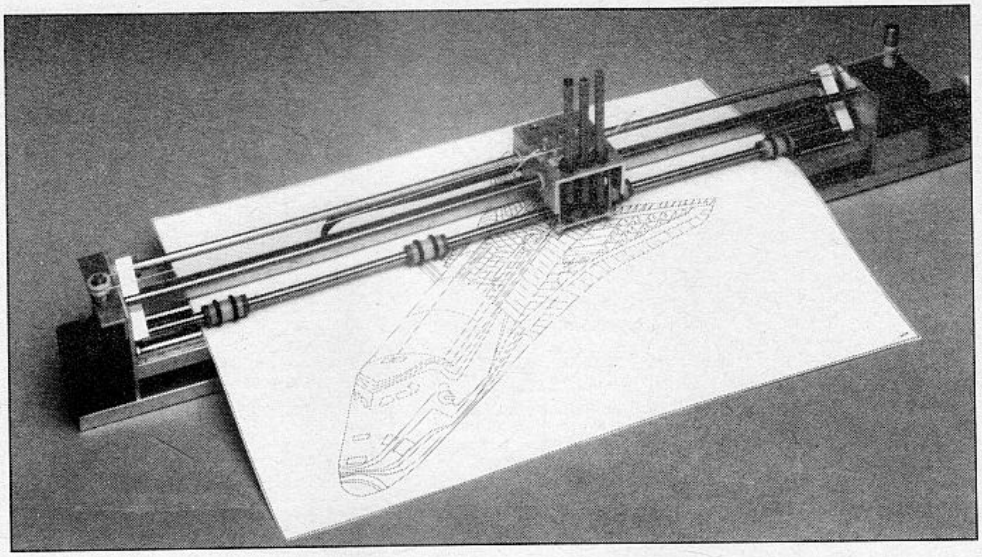

The plotter we published roughly two years ago is among our most popular projects thanks to a relatively simple mechanical construction and the availability of an associated stepper motor driver board. Although a number of readers have sent us suggestions for software drivers that would enable the plotter to be used with popular computers, only Mr. Lewetz' contribution proved to meet the requirements as regards use of the driver on IBM PCs, and (at least partial) compatibility with the industry-standard HPGL plotter command language. Before introducing the software, however, we avail ourselves of the opportunity to propose some improvements to the mechanical design of the plotter.

Like its predecessor (Ref. 1), the Mark-II version of the plotter uses paper movement for the Y-direction, and pen movement for the X-direction. As such, the operation of the plotter is not unlike that of a matrix printer. The platen which causes the paper movement is operated direct by a stepper motor. The pen carriage is coupled to another stepper motor via a string. Small solenoids control the pen up/down movement. The simple mechanical construction and the possibility of customizing the plotter width in accordance with the maximum required paper width are important factors that made us prefer the above arrangement over the more complex X-Y variant.

The plotter works in conjunction with a control board which translates a bit-pattern applied to its input into the corresponding control signals for the three solenoids and two stepper motors. The circuit is based on two special stepper motor driver ICs from Motorola which obviate complex bit-shift and timing operations for the control of the half-step and full-step modes as well as the forward/reverse movement of the stepper motors at the required accuracy. The chips, Type MC3479, allow the 8-bit wide input of the control board to be driven by a Centronics (printer-) port, which is available on almost any IBM PC-XT, AT or compatible. Connection details are given in Fig. 2.

The control board used for the new version of the plotter is that discussed in Ref. 1: no changes are required, and the circuit works in conjunction with the software package described further on.

Mechanical work

Since the mechanical construction of the plotter is discussed at length in Ref. 1, there is no need to repeat it here. The new working drawings, Figs. 1 and 3, and the associated parts list reflect most of the mechanical changes made to the original design. The most important change is that the Mark-II version is about 10 cm wider, which allows A2 paper to be used sideways and A3 paper lengthwise. Four paper rollers are used instead of two for improved accuracy of the Y-movement. Also, the platen is fitted with a 12 mm diameter bearing at the free side to reduce friction (see Fig. 4: the original had a nylon bushing).

Further improvements to the original design have been suggested by numerous readers. The use of a lathe to reduce the diameter of the platen at the locations of the sandpaper grips, for instance, may be gone round by covering the platen in flexible conduit. The same is suggested for the paper rolls. It should be noted, however, that these modifications may result in different step sizes for the horizontal and vertical movement, which may require software-controlled compensation.

Further suggestions as regards improving the mechanical stability of the plotter entail the use of 4-mm thick aluminium, stainless steel or silver steel. One of our readers in Greece, a lathe operator by profession, has built the plotter from stainless steel, using sintered metal for the

MAIN SPECIFICATIONS

Hardware:

- beam plotter for paper size up to DIN-A2 (594×420 mm)
- repeatability: <0.1 mm
- 3 colours
- simple construction
- control board with centronics input

Software:

- partially HPGL compatible (6 commands supported)
- plot commands sent via Centronics port
- compatible with *Elektor Electronics* plotter driver board
- software spooler
- configuration file
- programmable plot speed
- multitasking Turbo-C control program
- auxiliary programs for:
  - keyboard control
  - plot file formatting
  - full/half-step operation

bearings, and PTFE (teflon) for the rollers. The use of high-grade metals, however, requires a wide range of tools and other special materials from your local hardware shop, and, of course, access to a lathe.

The nylon string is a crucial part and requires special attention because it must be secured in a manner that eliminates any risk of slipping on the spindle of the X-motor. One string end is secured to the carriage at the side of the string wheel. From there, the string goes to the string wheel where it makes a left turn towards the X-motor. The carriage is pushed to the extreme left (X-motor side), and the string is wound on to the motor spindle (part id. 10) until one particular point in the string is always in contact with the spindle. This means that the total length of the wound part of the string is equal to or greater than the maximum X-distance that can be travelled by the carriage. The point in the string is secured at the top of the motor spindle with the aid of an M3 screw.

Software

The software driver developed for the plotter runs on IBM PCs and compatibles. The driver is written in Turbo-C (Borland version), and is capable of reading plot files with a reduced command set to the HPGL, Calcomp or Gould standard. The program converts the data and commands in these files into coordinate numbers in the relevant plot area before it sends, via the Centronics port, the necessary motor and pen control commands to the plotter driver board.

To be able to generate a usable plot file, the CAD program which is used to make the drawing must have plotter types

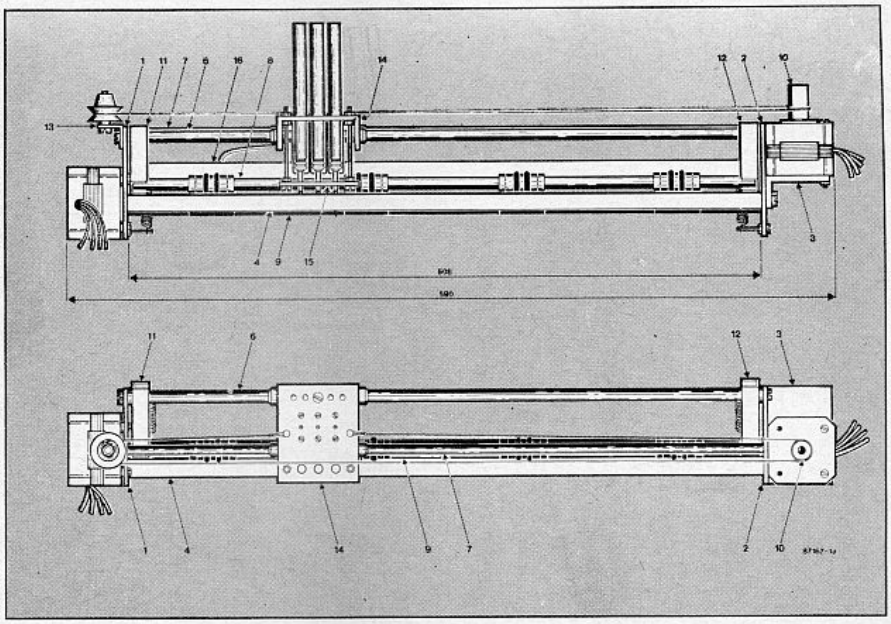

Fig. 1a. General parts identification of the plotter.

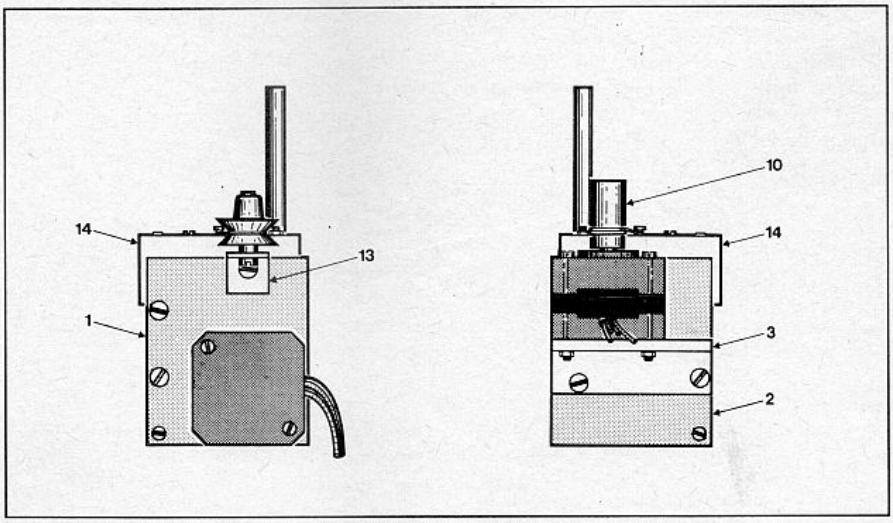

Fig. 1b. Parts identification for the side plates which hold the stepper motors.

AS = 3	Number of pens
PW = 0	Pause at pen change (0/1)
WB = 100	Wait time after pen actuation (clock cycles; 1–255)
2X = 0	X-difference between pen 1 and pen 2 (–500–500)
2Y = 0	Y-difference between pen 1 and pen 2 (–500–500)
3X = 0	X-difference between pen 2 and pen 3 (–500–500)
3Y = 0	Y difference between pen 2 and pen 3 (–500–500)
MX = 1700	Maximum X-coordinate (0–1000)
MY = 2000	Maximum Y-coordinate (0–10000)
SD = 4	Step duration (clock cycles; 1–255)
SS = 1	Parallel port number (1/2)
GS = 0	Full-step mode
PT = 55	System clock (1–255)
LA = 1	Loudspeaker on/off (0/1)
BV = 1	Slow/fast (0/1)
PS = 1	Plot language (1=Calcomp; 2=Gould; 3=HPGL)
RA = 1	Draw frame (0/1/2)
SX = 100	X-scale (1–1000%)
SY = 100	Y-scale (1–1000%)

Table 1. Parameters in the driver configuration file, MONDRIAN.SYS.

HP7220, Calcomp 81 or Gould 6200 in its device driver list. On completion of the drawing, the plot file is not sent direct to the Centronics port, but to a file which is temporarily stored on disk.

The plotter driver program, MONDRIAN.EXE, is called up with the plot file name as an extension, for instance:

MONDRIAN NOZZLE.CAL

To enable the driver program to find the plot file, it must either be listed in the same subdirectory, or the PATH configuration must be set accordingly.

The program starts with a menu screen which shows the current options and parameters. The lower window on the screen shows the plotter commands as they are read and converted.

The program works on two tasks in a quasi-simultaneous manner: the conversion of plot coordinates into step pulses for the motors, and, in the background, the sending of calculated values to the plotter control board via the Centronics interface. A problem may arise from the assignment of processor time to these tasks. If the calculations run too fast, the plotter forms a bottleneck after a relatively short time. Conversely, if the calculations run much slower than the actual plotter control, the plotter wastes time waiting for new commands from the computer. The time sharing problem is eliminated by an auxiliary program, REALTIME.COM, which establishes an optimum time ratio for the two processes on the basis of the computer type used.

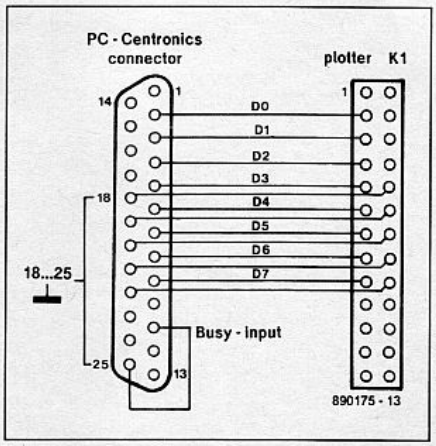

Fig. 2. Connections between the PC Centronics port and the input of the plotter driver board.

The driver program may be called up with a test switch:

MONDRIAN /T

to check quickly and without wasting paper whether the drawing fits on the required paper size. If not, the scale factors must be modified accordingly.

Parameters and configuration file

The plotter driver program is simple to configure for different mechanical constructions (as already noted, the constructor determines his own plotter width). The configuration file on the disk, MONDRIAN.SYS, contains the start parameters — an example is shown in Table 1. The file contains ASCII characters only and may be edited with a word processor. Each line starts with a two-letter parameter identification and a default value, which can take up to three digits. As shown in the example, each line is made complete with comment.

When called up, the control program searches for MONDRIAN.SYS and loads the user-defined configuration. If the file can not be found, default values are adopted for the parameters otherwise loaded from MONDRIAN.SYS. A fair number of configuration options is available, from the number of pens to the zoom factor and the plot language. The nX parameters (X-Y difference) allow drilling inaccuracies in the pen holes to be compensated: in this manner, the inaccuracy caused by a pen (= colour) change can be kept smaller than 0.1 mm.

Limitations

It should be noted that version 1.0 of MONDRIAN.EXE recognizes only six HPGL (Hewlett-Packard Graphics Language) commands, while the language has many more. The same goes for the Calcomp and Gould formats: only six commands are supported. Fortunately, many problems caused by this limitation may be prevented by using the right plotter driver. Most CAD programs allow the user to select a particular plotter driver from a menu during installation of the

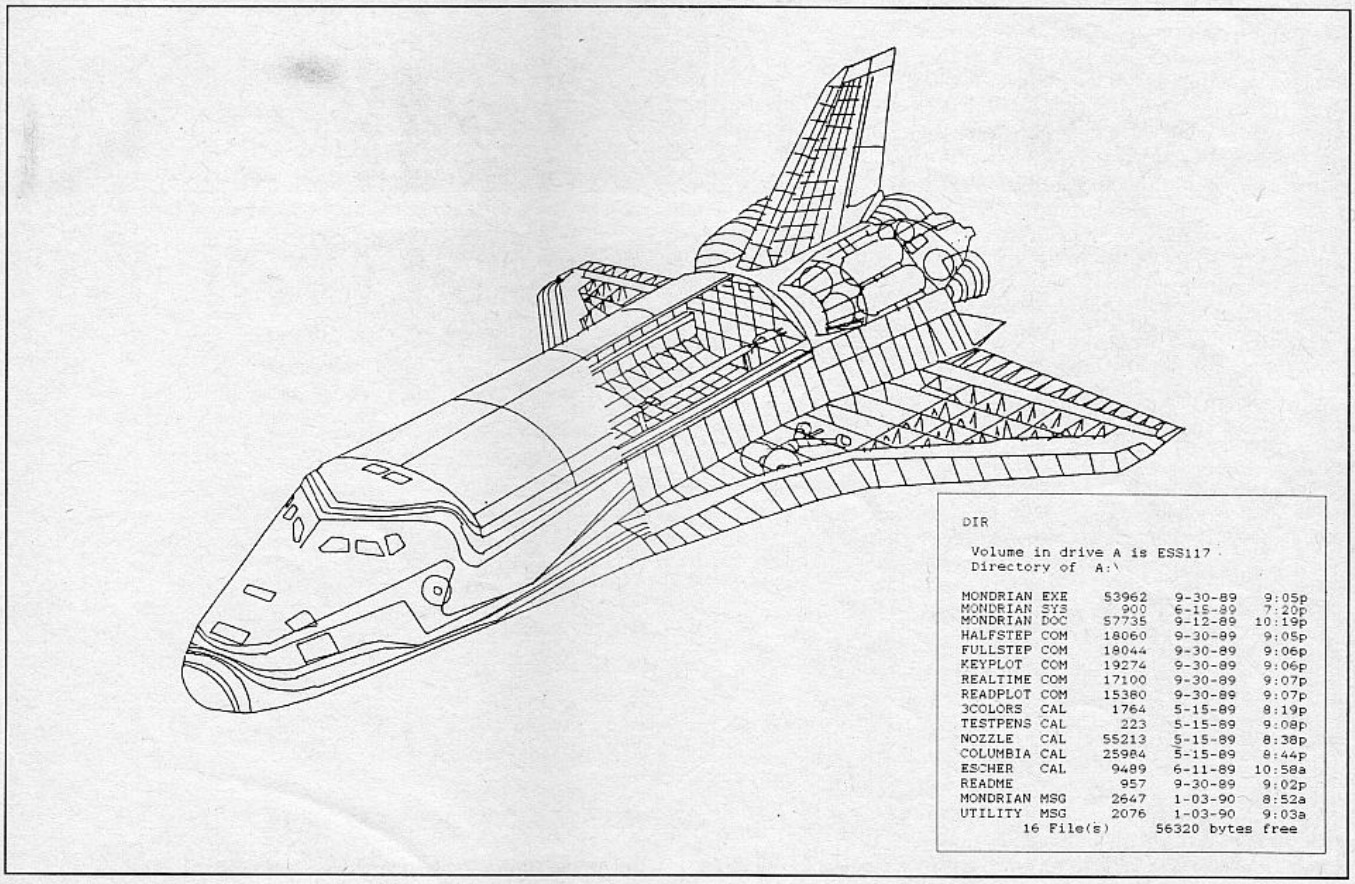

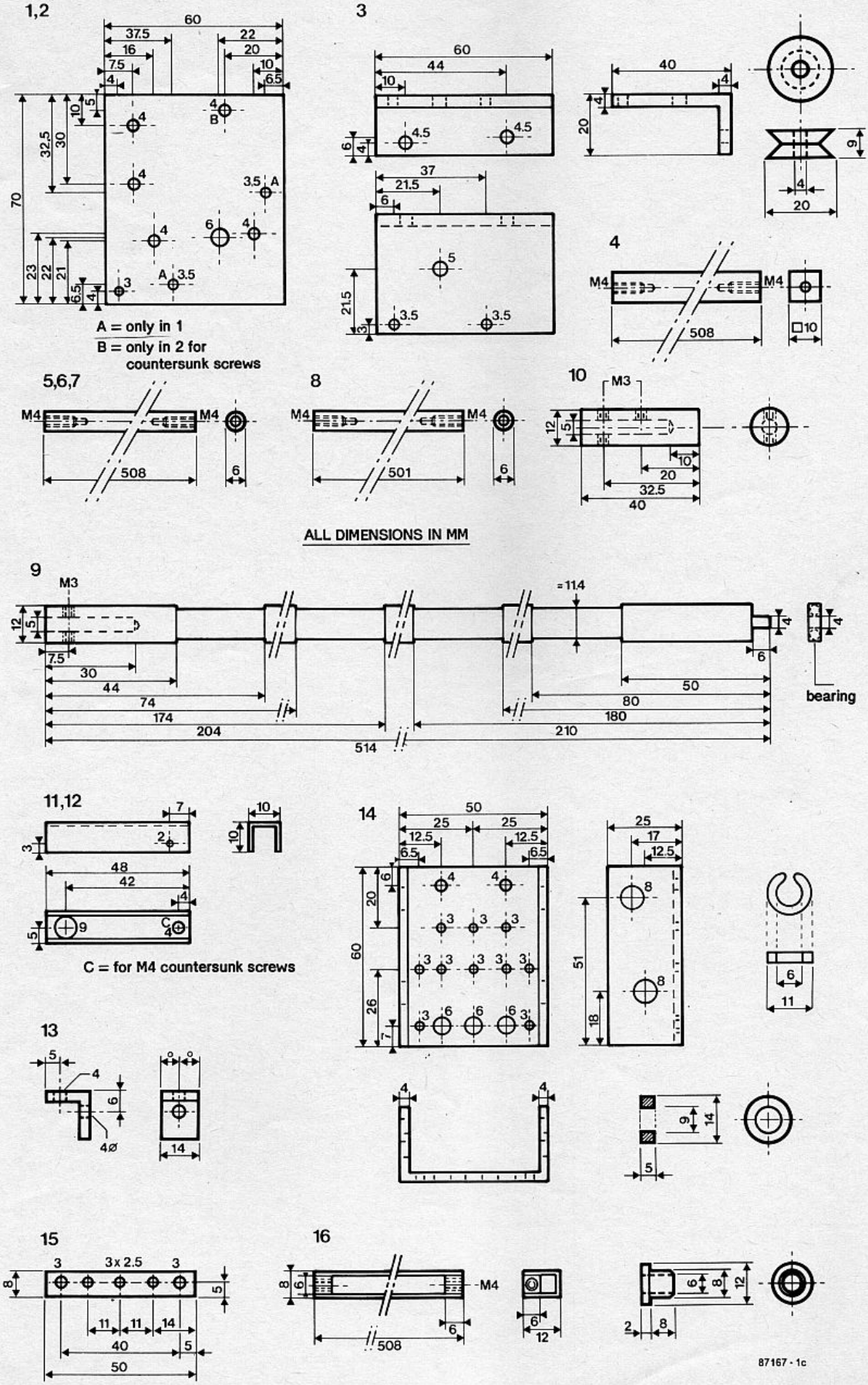

Fig. 3. Dimensions of all nylon and aluminium or stainless steel parts that must be cut, filed, turned and drilled.

MECHANICAL PARTS LIST

(all dimensions in mm)

1. side plate; left; aluminium; 60×70×3 mm.
2. side plate; right; aluminium; 60×70×3 mm.
3. angled support bracket for X motor; L-shaped aluminium; 20×40×4 mm; length 60 mm.
4. square connection bar; aluminium 10×10 mm; 508 mm long.
5. round connection bar; aluminium/stainless steel rod; dia. 6 mm; 508 mm long.
6. round support bar for pen carriage; dimensions as 5.
7. round guide bar for pen carriage; dimensions as 5.
8. round bar for pressure rolls; aluminium/stainless steel rod; dia. 6 mm; length 501 mm.
9. platen; round aluminium bar; dia. 12 mm; length 514 mm.
10. shaft; aluminium; dia. 12 mm; length 40 mm.
11. tilt lever for pressure rolls spindle; U-shaped aluminium beam 10×10×1 mm; length 48 mm.
12. see 11).
13. angled support bracket for string wheel; U-shaped aluminium beam 15×15×2 mm; length 14 mm.
14. pen carriage; U-shaped aluminium beam 25×50×3 mm; length 60 mm.
15. pen positioning plate; aluminium; 8×50×2 mm.
16. cable guide; U-shaped aluminium beam 12×8 mm; length 508 mm.

Miscellaneous parts:
6 off slide bearings; nylon; Skiffy 08-6.
1 off bushing for platen; nylon; Skiffy 08-4 or 08-6, or suitable ball bearing.
2 off washer rings for Y-motor; internal dia. 3 mm; thickness 2 mm.
2 off rubber pressure rolls (e.g. cable grommet).
4 off fixing rings for dia. 6 mm spindle (e.g. Skiffy 11-1-6).
1 off string wheel.
3 off cylinder head screws M4×5.
2 off cylinder head screws M4×10 (for fixing part no. 3).
1 off cylinder head screw M4×20 with 3 nuts.
5 off M4×5 screws with countersunk head.
4 off cylinder head screws M3×40 (for fixing stepper motors).
2 off cylinder head screws M3×50 (for fixing part no. 15).
2 off cylinder head screws M3×10 (for fixing string).
2 off cylinder head screws M3×15 (for fixing spring brackets).
4 off headless adjustment screws M3×3 (for fixing part nos. 9 and 10).
6 off bolts M2.6×5 (for fixing pen lift magnets).
16 off hexagonal nuts M3.
2 off springs for pressure rolls spindle.
string; e.g., wound fishing line
fine grade sandpaper (for securing on platen).

Electromechanical parts:
2 off stepper motors; 200 steps/rev.; dual-phase bipolar; 200 mA/phase (e.g. Berger, as used in disk drives).
3 off pen lift electromagnets; 12 V; e.g. Binder Magnete Type 40031-09B00.

Distributor of Skiffy products in the UK is Salterfix Fasteners • Salter Springs & Pressings Limited • Spring Road • Smethwick • Warley • West Midlands B66 1PF. Telephone: (021 553) 2929. Telex: 337877.

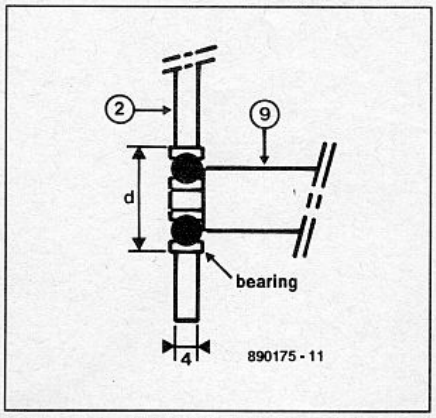

Fig. 4. A ball-bearing may be used where the plate is secured to the side plate.

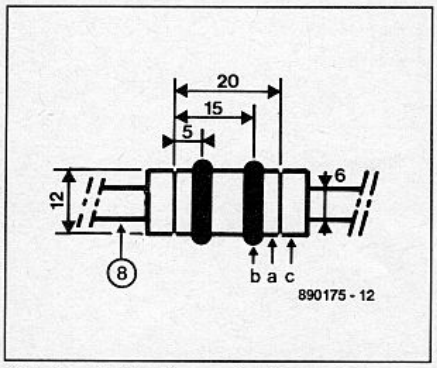

Fig. 5. Detailed construction of a paper roll.

package. Programs like AutoCad and AutoSketch, for instance, use only six plot commands if a Hewlett Packard plotter is installed: circles and ellipsoids are drawn with the aid of MOVE and PLOT sequences rather than with the much more powerful ARC command. This means that only a subset of basic HPGL commands is used. Since the present driver program, MONDRIAN.EXE, is capable of handling the six basic commands, it should be suitable for many CAD packages, provided they can be configured to save plot files with the reduced set of HPGL commands. ■

Reference:

1. Plotter. *Elektor Electronics India*, June & July 1988.


```
Elektor Plotter Driver     Version 1.0     (c) Copyright by Elektor, 1989

stop at new pens            OFF   file name                 nozzle.cal
full-step                   OFF   plot commands            CALCOMP
speaker                     ON    frame size               1700/2000
speed up/slow down          ON    scaiing                  100%/100%
frame                       ON    clock                    0.99 ms
number of pens              3     clocks per step          4
parallel interface          1     clocks per pen movement100

  41 : 1347/1115K    move to :1347/1115
  42 : H             pen up
  43 : 1325/1123K    move to :1325/1123
  44 : I             pen down
  45 : 1174/1274K    move to :1174/1274
  46 : 1168/1282K    move to :1168/1282
  47 : 1167/1291K    move to :1167/1291
  48 : 1168/1300K    move to :1168/1300
  49 : 1174/1308K    move to :1174/1308
  50 : 1659/1794K    move to :1659/1794
  51 : H             pen up

continue - press any key...        c - cancel  p - pause  s - stop
```

Fig. 6. Screen dump of the plotter driver program, MONDRIAN.EXE.

POWER LINE MONITOR

J. Ruffell

Most of us are aware that computers and other digital systems can go haywire just like that. If neither the hardware nor the software can be blamed for the hang-up, spikes on the mains voltage are the most likely cause of the trouble. The power line monitor described here enables you to determine whether or not spikes occur frequently on a particular mains outlet, and whether or not digital equipment needs to be powered via a mains filter to reduce the risk of hang-ups or total break-downs.

Sudden transient disturbances of the mains voltage are commonly referred to as surges or spikes. Since their peak voltage can exceed the normal mains voltage by hundreds of volts, it is not surprising that mains-powered equipment behaves erratically or breaks down altogether. Unfortunately, the occurrence of spikes is fairly difficult to record reliably, the reasons for which are mainly:

- the occurrence of a spike is difficult to predict;
- the voltage rise has a very short duration (typ. 10–500 ns);
- voltage peaks in excess of 1,000 V are no exception;
- the recording instrument must be connected to the mains line.

Principle of operation

The principle behind the power line monitor is shown in Fig. 1. Resistor R_9 forms a load for the rectified mains voltage. Assuming that the mains frequency is 50 Hz, the frequency of the voltage on R_9 is 100 Hz because a full-wave rectifier, D_1-D_4, is used. Spikes typically have a much higher frequency and are, therefore, readily detected with the aid of a high-pass filter, C_1-R_t, where R_t is the input resistance of the detector circuit. The 3 dB roll-off frequency of this high-pass is about 16 kHz, while its time-constant, τ, equals

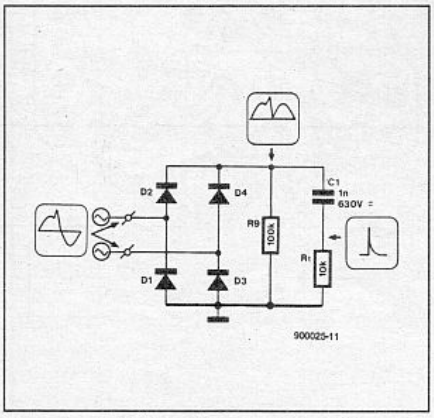

Fig. 1. Principle of spike detection.

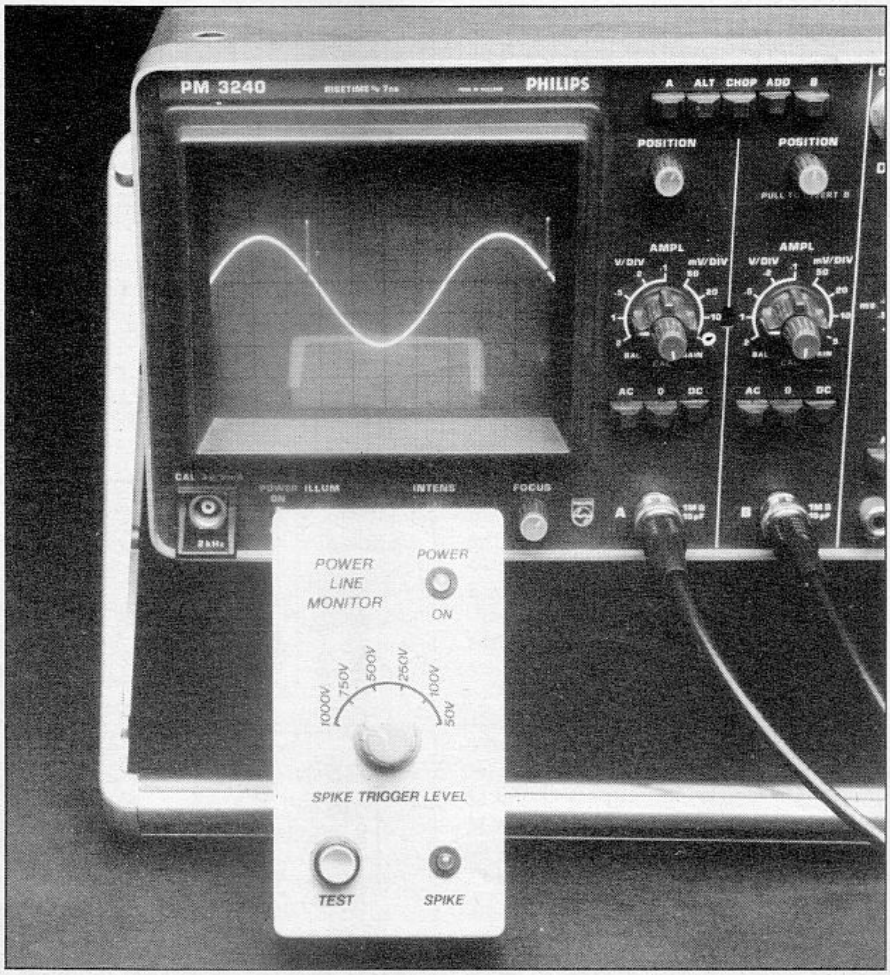

R_tC_1=10 µs. The function of R_9 may be less obvious in this basic circuit. Without it, however, C_1 would be charged to the peak value of the mains voltage (approx. 340 V). This would cause the diodes in the bridge rectifier to start conducting again if the mains voltage rises above this peak value. As a result, a 200-V spike during the mains zero crossing could not be detected since it would end up in the bridge rectifier. R_9 is, therefore, fitted to ensure that the voltage on C_1 follows the rectified voltage accurately. Hence, spikes are not

MAIN SPECIFICATIONS

- trigger level adjustable in six steps: 50 V; 100 V; 250 V; 500 V; 1000 V
- response time: <50 ns
- potential-free detector output via opto-coupler ($U_{CE(max)}$=32 V)
- built-in mains power supply
- visual and audible spike indication

blocked by the rectifier, and they are too fast to be 'followed' by C_1. The result is that each and every spike or dip on the mains voltage appears across R_t. Dips, however, are ignored by the detector circuit.

Circuit description

Figure 2 shows the circuit diagram of the power line monitor. The mains voltage is rectified by a bridge circuit composed of four diodes Type 1N4007. This diode is used because of its peak reverse voltage specification of 1,500 V. The value of R_9 is a compromise between acceptable dissipation and sufficient loading of C_1. The high-pass filter is formed by C_1 and R_1-R_8. The minimum working voltage of C_1 must be 630 VDC since the device has on it the rectified voltage of about 340 V. The resistor ladder network, R_1-R_8, has only the spikes across it.

The ladder network and the associated rotary switch allow spikes at a certain level to be attenuated before they are applied to the trigger input of the detector, IC_{1b}, via the pole of S_1. A Type 74HCT221 dual MMV is used because of the following specifications, of which the importance is undisputed in the application circuit:

- the inputs are protected up to 2.5 kV typical;
- the input capacitance is low at 3.5 pF typical;
- the minimum width of the trigger pulse is 14 ns;
- the trigger level is accurately defined at 1.3 V, which enables a simple voltage divider to be used.

Note, however, that the actual minimum trigger pulse width is determined by the input attenuator and the stray capacitance of the input protection diodes, D_9-D_{10}, and the trigger input of IC_{1b}. This R-C combination forms a low-pass filter that causes spikes to be detected only if they are longer than 50 µs.

Monostable multivibrator (MMV) IC_{1b} is triggered when the attenuated spike voltage exceeds the trigger threshold set with S_1. On triggering, outputs Q and $\overline{Q}$ supply a 20-ms pulse. The pulse at the Q output is fed to IC_{1a}, which lengthens it to about 1 second. During this time, LED D_{11} and buzzer Bz_1 signal the occurrence of a

OPERATION AND CONTROLS

Range switch (S_1): set to expected spike level. Spikes exceeding set level are detected and indicated.

Test switch (S_2): press to test trigger function (manual trigger)

LED (D_5): on/off indicator

LED D_{11} and buzzer Bz_1: spike indicators

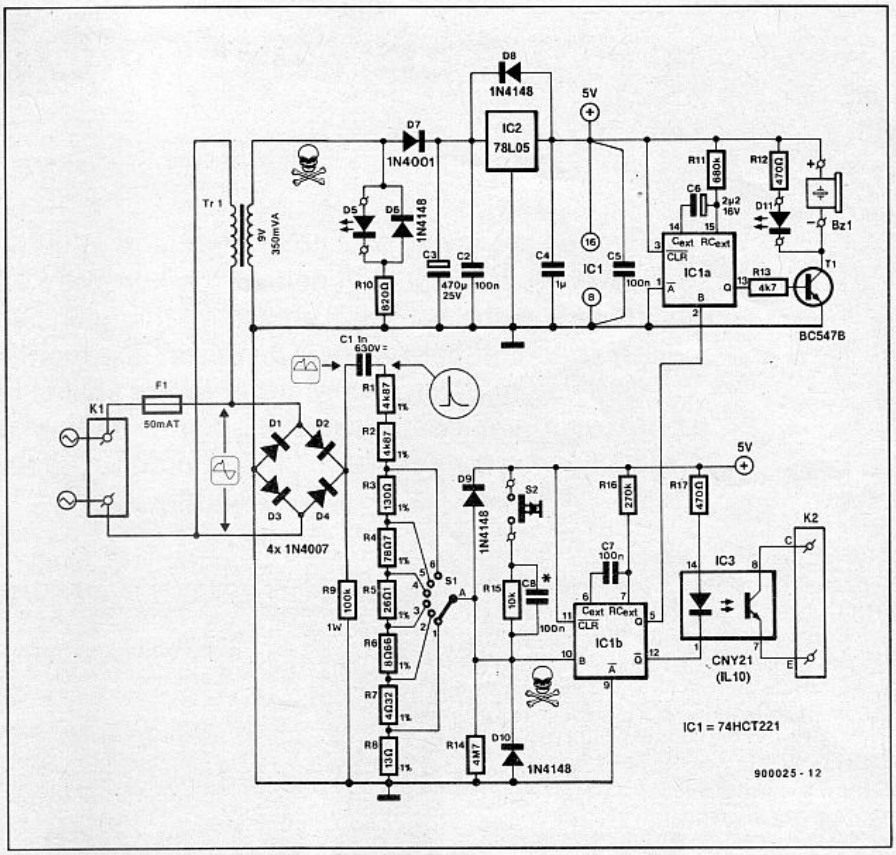

Fig. 2. Circuit diagram of the power line monitor.

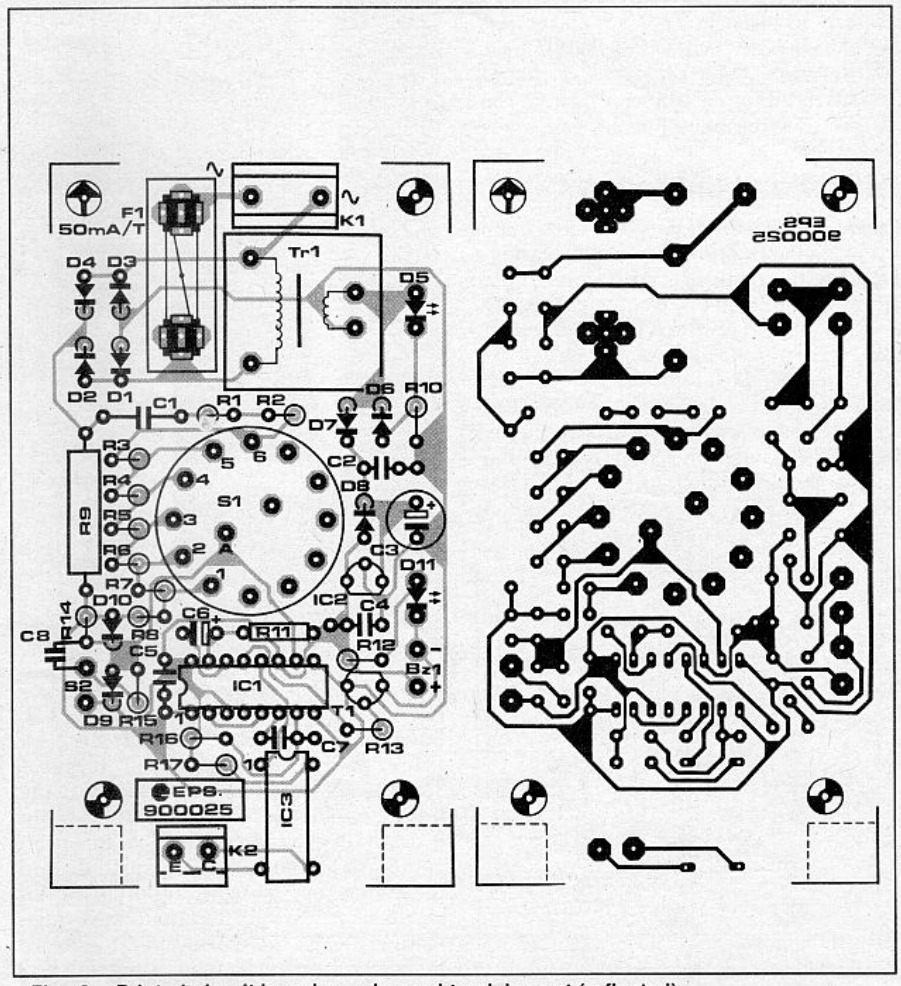

Fig. 3. Printed-circuit board overlay and track lay-out (reflected).

COMPONENTS LIST

Resistors:
R_1;R_2 = 4k87 1%
R_3 = 130Ω 1%
R_4 = 78R7 1%
R_5 = 26R1 1%
R_6 = 8Ω66 1%
R_7 = 4Ω32 1%
R_8 = 13Ω 1%
R_9 = 100k 1 W
R_{10} = 820Ω
R_{11} = 680k
R_{12};R_{17} = 470Ω
R_{13} = 4k7
R_{14} = 4M7
R_{15} = 10k
R_{16} = 270k

Capacitors:
C_1 = 1n0; 630 V
C_2;C_5;C_7 = 100n
C3 = 470µ; 25 V; radial
C_4 = 1µ0
C_6 = 2µ2; 16 V; radial
C_8 = 100n

Semiconductors:
D_1 – D_4 = 1N4007
D_5 = LED 5 mm green
D_6;D_8;D_9;D_{10} = 1N4148
D_7 = 1N4001
D_{11} = LED; 5 mm; red
T_1 = BC547B
IC_1 = 74HCT221
IC_2 = 78L05
IC_3 = CNY21 or IL10 (Siemens; Electro-Value Ltd.)

Miscellaneous:
S_1 = 2-pole 6-way rotary switch for PCB mounting; plastic spindle.
S_2 = miniature push-to-make button.
Bz_1 = 5-V active buzzer.
F_1 = fuse; 50 mA; slow; with PCB-mount holder.
Tr_1 = 9 V/0.35 VA mains transformer.
K_1 = 2-way mains-rated terminal block.
K_2 = 2-way terminal block.
ABS mains supply case; outside dimensions: 120×65×40 mm.
PCB Type 900025

spike. The detection circuit may be tested by pressing S_2; this causes IC_{1b} to be triggered manually.

The $\overline{Q}$ output of IC_{1b} drives an optocoupler, IC_3, to create a potential-free output, i.e., an output that is not at mains potential and, therefore, safe (within limits) for connection to other equipment. Connector K_2 may be wired to the input of, for instance, an event counter to establish the number of spikes that occur during a certain period. The output may also be used to stop a digital clock, or for other time-keeping purposes, to enable the origin of the spike to be traced. Another application is the use of a storage oscilloscope to determine when and why a particular computer broke down owing to a mains surge.

Because of the limited drive capacity of the 74HCT221, the LED in the optocoupler is not fed with its maximum current. This means that the external collector resistor for the optocoupler must not be smaller than 10 kΩ to ensure that the phototransistor is just driven into saturation.

Be sure to connect the external collector resistor and the emitter of the optocoupler to the positive supply and ground respectively of the recording equipment (whether digital or analogue), **never** to the +5 V and ground lines of the power line monitor, since these may be at mains potential.

The +5 V voltage for the power line monitor is provided by a standard power supply based on a mains transformer and a fixed-voltage regulator, IC_2. Note that the use of this supply does **not** mean that the low-voltage part of the circuit is safe to touch.

Construction and initial test

With safety in mind, it is best to construct the circuit on the printed-circuit board shown in Fig. 3. This board is mounted into a so-called power supply enclosure which is supplied complete with line and neutral pins for plugging into a mains outlet.

Capacitor C_8 is not shown on the overlay, but may be connected in parallel with R_{15} at the track side of the board. The rotary switch must be a type with a plastic shaft, and the push-button must be fitted recessed, so that none of its metal parts protrude from the enclosure.

All equipment connected to K_2 must be powered from a separate supply, battery or adapter.

The operation of the monitor is simple to verify by plugging it into a mains socket and switching a nearby fluorescent tube on and off a few times. Set to the most sensitive range (50 V), the monitor is nearly always triggered if the mains outlet is on the same line as, and within 10 m from, the tube lighting. The number of 'hits' will be found to decrease as the sensitivity of the monitor is lowered, and the distance to the tube is increased. ■

NEW PRODUCTS

TEMPERATURE GUAGE

OPTEX CO. LTD., JAPAN has launched a temperature equipment which measures temperature from 0 to 2000 degrees centigrade (different models for different ranges). A useful feature is that it can measure temperature through a glass window, making it possible to measure temperature inside furnaces/boilers etc. It gives the standard analogue output as per instrumentation standards (1 to 5 volts or 1 mv/degree C or 1 mv/degree F switch-able) making it possible to connect the standard DPM.

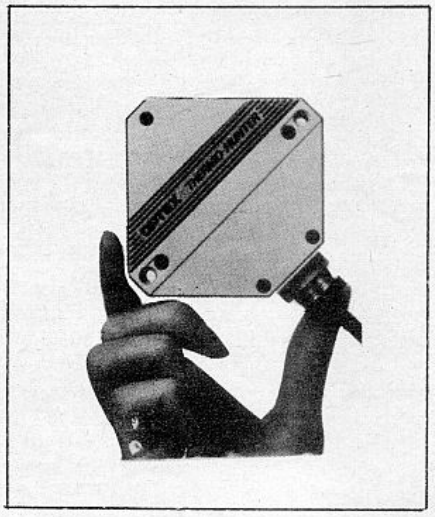

The equipment can be imported or can be arranged to be supplied on Rupee payment basis as the case may be to suit the customer's requirements.

Mecord Marketing Pvt. Ltd. • 304, Hill View Industrial Estate • Off. L.B.S. Marg • Ghatkopar West • Bombay 400 086 • Tel: 588552, 588553 • Telex: 011-72132 PLA IN • Fax: (022) 812 2458

SURGE SUPPRESSOR

J. Ruffell

It is an annoying but generally accepted fact that much mains-operated equipment produces surges and other interference on the mains. But we do not have to put up with clicking noises from AF equipment as the refrigerator switches on, or a computer that stops working when the lights are switched on. All that is needed to prevent these irritating effects is a good-quality mains filter.

Ideally, any mains outlet supplies an alternating voltage of a root-mean-square (rms) value and a frequency specified by the national (or local) electricity supplier (in the larger part of the UK, these values are 240 V_{rms} and 50 Hz respectively). In practice, however, this is hardly ever so. In not a few cases, the mains voltage is occasionally corrupted by high-frequency signals, data-bursts, brief fluctuations, surges and dips.

Although mains signalling is a well-defined area*, some types of mains intercom operating at carrier frequencies of 100 kHz and up are notorious sources of interference. Pulse-like interference often emanates from dimmer circuits, switch-mode power supplies in computers and defective or poorly decoupled household equipment like coffee machines and refrigerators.

In some countries, the electricity suppliers themselves use the mains lines to convey control information for normal/reduced rate switching of domestic power consumption meters.

To avoid problems with any equipment powered from the mains, a mains filter as the one described here must work in both directions, which means that both mains-borne interference and interference generated by the equipment must be suppressed. The filter proposed here is suitable for use with 220–240 V mains systems operating at 50 Hz.

Design considerations

The mains filter is basically a passive low-pass with a roll-off frequency of 50 Hz. Its likeness to a low-pass filter for audio applications is only superficial however since the high operating voltage and the associated considerations as regards safety govern the use of special components. In many countries, standards have been set up that define the maximum capacitor values used in the filter, often depending on whether mains-powered equipment is wall- or floor-mounted, or portable. These capacitor values are a carefully established compromise between acceptable switch-on and switch-off currents on the one hand, and the risk of electrical shock in the case of defective or improperly connected earthing on the other.

Capacitors alone can not secure the required slope steepness of the filter. The attenuation outside the pass-band is improved considerably by using one or more chokes. These come in at least three versions. In general, the choke with the highest inductance is the most effective. However, if reactive loads are powered, the voltage drop across the choke rises with inductance. In practice, this means that the filter has to be geared accurately to the load and the nature of the anticipated interference.

The simplest version is the saturation choke. When the mains is switched on, this type of inductor possesses a high inductance, which rapidly becomes smaller as the current causes the ferrite-iron core to become saturated. The interference suppression grade is nearly always specified for symmetrical (balanced) interference, that is, interference that exists between the live (L) and neutral (N) line.

The multiple-winding current-compensated toroid choke is more effective but also more expensive than the saturation type. Strong capacitive coupling between the circuit and the enclosure causes an asymmetrical current (between L/N and E) to flow into the equipment through the earth wire, and half of it back into the mains through the live or neutral line. The partial interference current causes the choke, of which the windings are inserted in the phase or neutral line, to be damped so that the magnetic fields generated in the windings cancel one another. The inductance of both chokes is small for the load current and therefore introduces a small voltage drop only.

The bar-type choke is best used for loads over 100 A that produce mainly symmetrical interference (between live and neutral). In contrast to the saturation choke, the inductance of a bar-type choke remains constant.

Practical circuit

The circuit diagram of the mains filter is given in Fig. 1. The mains voltage is applied via connector K_1. Components C_1 and R_2 form a potential divider for the on/off indicator, D_1. Capacitor C_1 dis-

* Mains signaling in the UK is subject to the provisions of British Standard BS6839. Further information on the subject may be obtained from BIMSA (BEAMA Interactive and Mains Systems Association), Leicester House, 8 Leicester Street, LONDON WC2H 7BN, Telephone: (01-437) 0678.

charges via resistor R_1 when the filter is disconnected from the mains. Diode D_2 is connected across D_1 to keep the reverse voltage across the LED within safe limits. Voltage peaks exceeding 250 V are eliminated by varistor VDR_1.

Capacitors C_2 and C_3 must be class-X2 types. Similarly, C_4 and C_5 must be class-Y types. These type codes indicate an a.c. working voltage of 250 V and apply to metallized polyester or polypropylene capacitors with good self-healing properties should arcing occur in the dielectric material. X2-class capacitors may not be used in positions where their failure would expose anybody to electric shock. Consequently, these capacitors are connected between the live and neutral lines to ensure that failure can only cause a blown fuse (in the case of a short-circuit) or reduced filter operation (in the case of an open-circuit). Both effects are annoying but not dangerous.

The requirements of the Y-type capacitors, C_4 and C_5, are more stringent (see B.S. 6201, part 3, and IEC 161). Like C_2 and

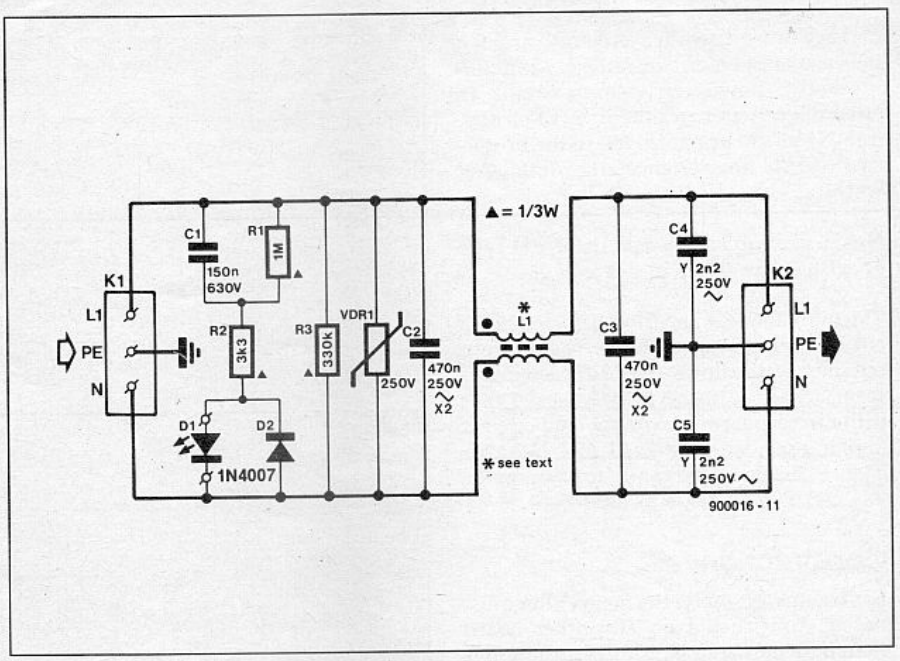

Fig. 1. Circuit diagram of the surge suppressor.

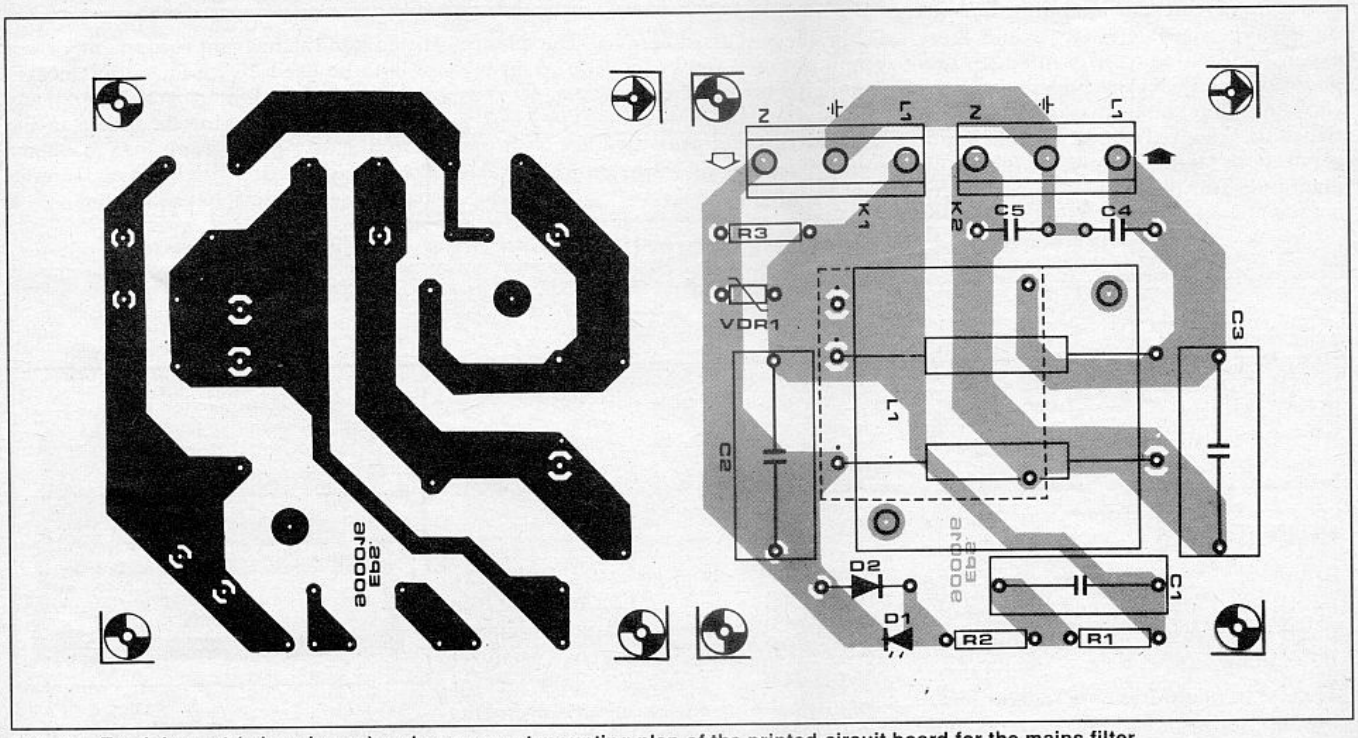

Fig. 2. Track lay-out (mirror image) and component mounting plan of the printed-circuit board for the mains filter.

COMPONENTS LIST

Resistors:
R_1 = 1M0 0.33 W
R_2 = 3k3 0.33 W
R_3 = 330k 0.33 W
VDR_1 = S10K250 [1]

Capacitors:
C_1 = 150n; 630 VDC
C_2;C_3 = 470n; 250 VAC class-X2 [2]
C_4;C_5 = 2n2; 250 VAC class-Y [3]

Semiconductors:
D_1 = LED 5 mm red
D_2 = 1N4007

Miscellaneous:
L_1 = choke 2×10 mH Type RD62-3 or 2×4 mH type RD 62-6 [4].
F_1 = fuse 2.5 A slow (for RD62-3) or 5 A slow (for RD62-6).
K_1;K_2 = 3-way PCB screw terminal block (pin distance 10 mm).
ABS enclosure 110×110×65 mm.
Panel-mount mains socket with integral fuse-holder.
Panel-mount mains receptacle.
PCB Type 900016

[1] ElectroValue Limited • 28 St Judes Road • Englefield Green • Egham • Surrey TW20 0HB. Telephone: (0784) 33603. Telex: 264475. Fax: (0784) 35216. Northern branch: 680 Burnage Lane • Manchester M19 1NA. Telephone: (061 432) 4945.

[2] e.g., RS Components stock no. 115-219.
[3] e.g., RS Components stock no. 114-496.

[4] Schaffner UK • Headley Park • Area 10 • Headley Road East • Woodley • READING RG5 4SW. Telephone: (0734) 697179.

C_3, they cause degraded filter operation in the case of open-circuit failure. More importantly, however, a short-circuit in either C_4 or C_5 causes the live (L) or neutral (N) line to be connected to the protective earth line. Hence the following warning:

Never use capacitors of a different type or rating than those indicated.

The inductance in the filter is formed by a current-compensated choke. The printed-circuit board allows two different types from Schaffner to be fitted. These types differ in respect of maximum load current and inductance. The 2x10 mH inductor Type RD62-3 is rated for up to 3 A, and the 2×4 mH Type RD62-6 for up to 6 A.

Construction

For reasons of safety, the mains filter must not be constructed on any other board than that shown in Fig. 2. Construction is straightforward with the possible exception of L_1, of which the mounting depends on the type used. The larger and more expensive 6-A inductor is fitted upside-down on the PCB. The underside of the choke has four colour-marked wires. The two dark-coloured wires are the input connections (at the side of C_2 in the circuit diagram). The two light-coloured wires are the output connections (at the side of C_3 in the circuit diagram). The photograph in Fig. 3 shows the RD62-6 on the completed board.

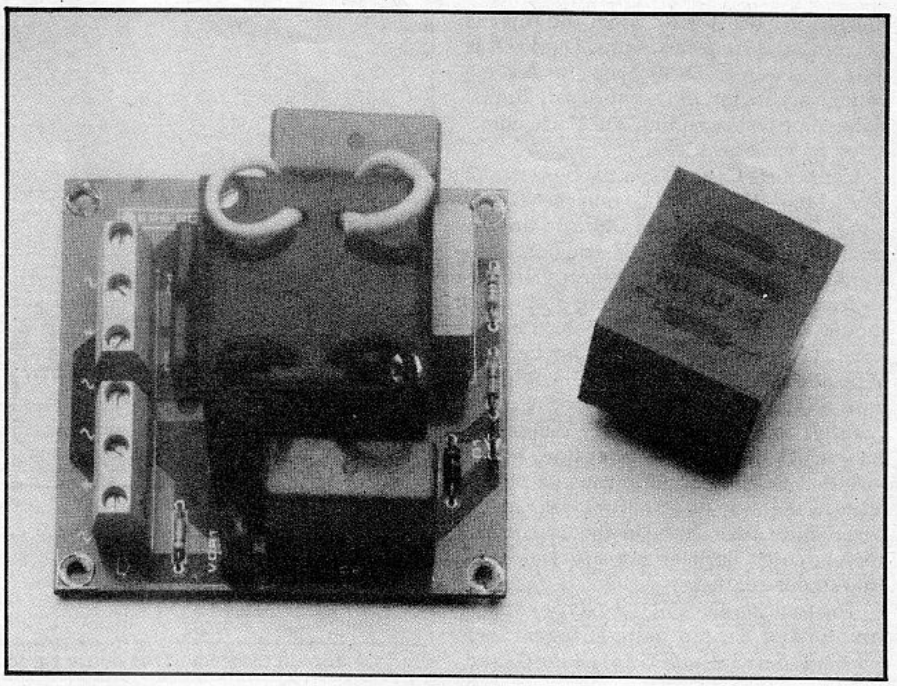

The smaller 3-A inductor Type RD62-3 is fitted in the normal manner with the connections inserted direct into the relevant PCB holes.

Do not test the mains filter before it is fitted into the relevant equipment, or —if it is to be used for various appliances— into a separate ABS enclosure without any metal part. The prototype shown in the introductory photograph has a mains socket and a mains plug for panel mounting as used on personal computers. ■

NEW PRODUCTS

HELIPOT DIALS

'PAVAN' Turns Indicating Dial, model-38D are designed & manufactured to be used with any multi turn Potentiometers.

These are made from specially selected thermo plastics and all brass components.

The main scale has 0 to 11 numbers & vernier scale 0 to 100 Divisions.

The metal cap window displays the main scale numbers & the vernier scale predicts the exact location of wiper contact of the potentiometers.

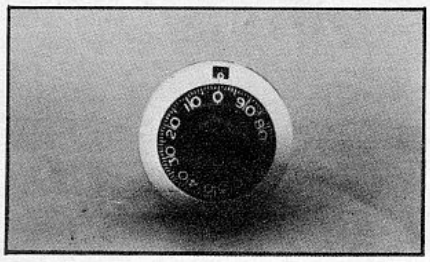

PAVAN INDUSTRIES • Post Box No. 162 • Valsad 396 001. Gujarat.

ANALYZER

Weighing less than 10 kg and with more than 4 hours of operation from built-in rechargeable batteries, Bruel & Kjaer's NEW Real-time Frequency Analyzer Type 2143 is a suitable analyzer for acoustical and vibration measurements in the field and in the laboratory.

Type 2143 operates in real-time with bandwidths down to 1/24 – octaves, and is able to read 1000 spectra per second into non-volatile memory. The memory capacity in the standard unit is sufficient for 512 1/3-octave spectra.

The built-in PC/MS-DOS compatible disk drive makes it easy to store the measured data and can be used to transfer data to other equipment. Type 2143 is operated by means of user-interactive menus while a system of on-screen help pages enables even a novice user to realize the full potential of the analyzer in the field. Type 2143 has further control and data-processing possibilities via the IEEE-488 and RS 232C interfaces.

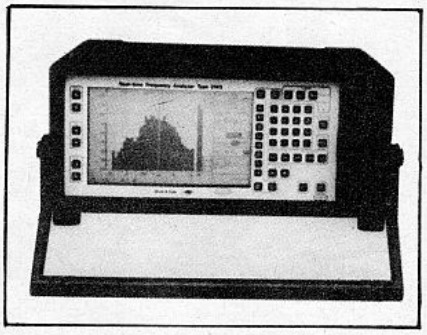

Available against Actual User's Import Licence.

JOST'S ENGINEERING COMPANY LIMITED • 60, Sir Phirozeshah Mehta Road • Fort • Bombay 400 001 • Tel: 2861150.

AUDIO/VIDEO MODULATOR

Many inexpensive or older TV sets lack a SCART or other composite video input, and can only be connected to a video recorder or other equipment via an RF modulator. The modulator described here —a design by ELV— operates at a UHF TV channel between 30 and 40. Use is made of a single-chip RF modulator that couples low cost to excellent sound and picture quality.

TV sets that lack an external video input are still manufactured and sold in large numbers. In many cases, these sets are relatively inexpensive types manufactured in Far Eastern countries. Unfortunately, upgrading such a TV set with an external video input is not possible in general because the chassis is at mains potential. Not a few owners of a low-cost TV set are therefore faced with connection problems if the set is to function as a display for, say, a computer that has a composite video output but lacks an RF modulator.

The present modulator covers the frequency range from 545 MHz to 625 MHz, which corresponds roughly to UHF TV channels 30 to 40. The circuit consists of two parts:
a modulated RF oscillator in a small metal box;
a motherboard on to which the RF oscillator, the SCART socket and the supply voltage regulator are fitted.

The motherboard and the RF oscillator form a compact unit fitted in an ELV Microline enclosure as shown on the above photograph. The modulator is powered by an external mains adapter with an output voltage of 12–15 V at about 250 mA.

Since the RF oscillator is a separate module in the modulator, it may be used without the motherboard to upgrade existing video equipment with a TV output.

MAIN SPECIFICATIONS

- High output level: approx. 100 mV (80 dBµV)
- Good frequency stability
- Low spurious radiation
- Audio-video input with SCART socket
- Adjustable sound subcarrier frequency
- Suitable for upgrading existing equipment

The circuit

The circuit diagram of the RF oscillator with modulation input is given in Fig. 1. The heart of the circuit is formed by IC_1, a Type TDA5660P single-chip multi-standard VHF/UHF audio/video modulator from Siemens.

The amplitude of the sound signal applied to pin 6 of the SCART socket, Bu_1, is set with P_1. Note that the SCART socket and the preset are not contained in the RF-tight metal enclosure. The sound signal is capacitively fed to the FM (frequency-modulation) sound input of the TDA5660P via C_1-C_2-R_2. Components R_2-C_2-R_3 form a pre-emphasis network. The frequency-modulated sound subcarrier is added to the vision signal by the RF mixer in the TDA5660P.

The sound subcarrier frequency (UK: +6.0 MHz) is set by a parallel tuned circuit, L_1-C_{14}. The vision-to-sound carrier ratio of 12.5 dB is ensured by R_9. Capacitor C_{22} connects the AM (amplitude-modulation) sound input of the TDA5660P to ground for alternating voltages.

The CVBS (chroma-video-blanking-sync) signal taken from pin 20 of the SCART socket is terminated into R_{11} and capacitively fed to video input pin 10 of the modulator chip via C_{18}. A clamping circuit at this input establishes a fixed synchronization level, while an automatic gain control circuit that acts on the peak white values compensates amplitude changes of up to 6 dB. Both the clamping circuit and the gain control circuit are internal to the TDA5660P. Capacitor C_{17} filters the current pulses produced by the peak white detector, and its value determines the time constant of the gain control.

The modulation index of the AM vision signal is set by the potential at pin 12 of

the TDA5660P. If no resistor is connected to this pin, the modulation index is 0.8 (80%) for negative video modulation. Note that pins 12 and 2 (reference voltage) are decoupled to ground to prevent interference.

The symmetrical oscillator on board the TDA5660P is bonded out to pins 3-7. The external tuned circuit is formed by inductor L_3 in combination with capacitors C_4 and C_{10}, and variable capacitance diode D_1. Capacitors C_5 and C_{11} prevent the direct voltages at pins 3 and 11 being short-circuited via L_3. The oscillator has a separate ground connection bonded out to pin 5.

The anode of varicap D_1 is grounded for direct voltages by R_4. The oscillator frequency is adjusted with the aid of a tuning voltage supplied by preset R_6 and applied to D_1 via R_5. Capacitors C_9 and C_{12} decouple the RF voltage generated by the oscillator.

The modulated RF signal (AM vision and FM sound) is taken from the outputs of the balanced mixer in the TDA5660P via pins 13 and 15. The output impedance of 300 Ω balanced is transformed down to 75 Ω unbalanced by L_2, a Guanella transformer, perhaps better known as a balun. Capacitor C_{16}, finally, feeds the modulated UHF signal to the RF output socket via terminal ST_6.

The modulated RF oscillator is powered by a regulated voltage of 10 V. A 12-V supply may also be used in case the oscillator is incorporated into existing equipment. The output voltage must, however, be regulated.

The motherboard has on it the RF oscillator module, the SCART socket, Bu_1, the sound level control, R_1, and the 10-V regulated power supply. The circuit diagram of the latter unit is shown in Fig. 3. The unregulated voltage applied to socket Bu_1 may lie between 14 V and 17 V. The current consumption of the modulator is less than 50 mA, so that a small mains adapter may be used.

The power supply itself is a standard design based on a three-pin fixed voltage regulator Type 7810 (IC_2). LED D_3 functions as an on/off indicator. The minimum and maximum voltage that may be applied to Bu_1 is 12.7 V and 25 V respectively.

Construction

The main point to note about the construction of the modulator is that the RF oscillator must be thoroughly screened to ensure mechanical as well as electrical stability and at the same time prevent spurious radiation of the UHF signal.

Start the construction by populating the oscillator board: fit and solder the two wire links, the six resistors and the varicap. Next, fit the capacitors, making sure that the ceramic types are pushed as far as possible towards the PCB surface. Fit preset R_6 and inductors L_1 and L_2. Do not fit the balun the wrong way around: the connection that consists of four joined wires goes to C_{15}. Finally, fit the TDA5660. Do not use an IC socket.

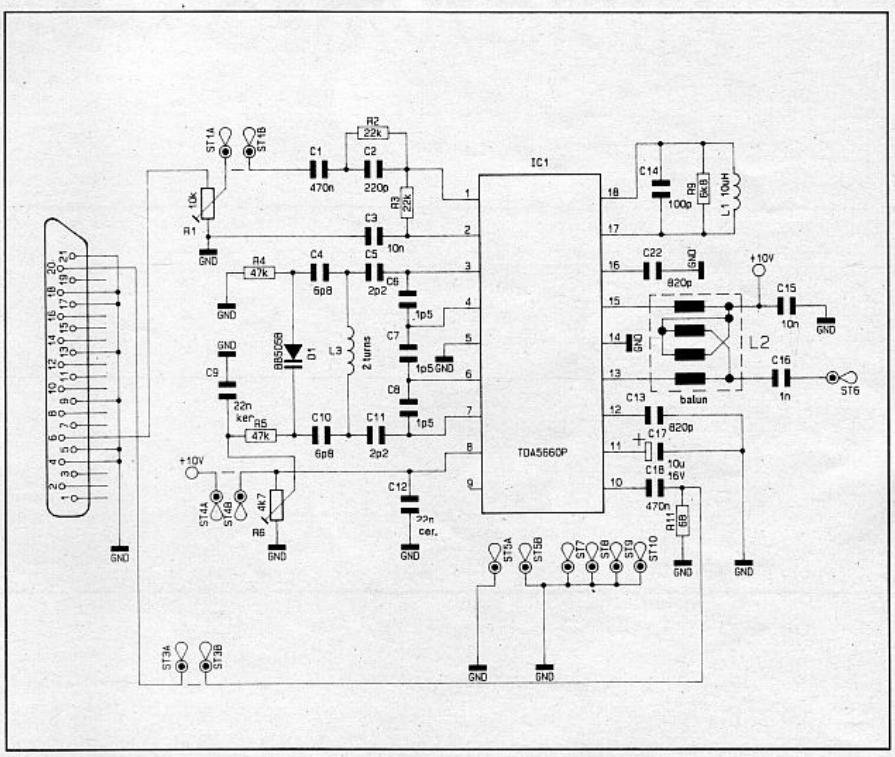

Fig. 1. Circuit diagram of the RF oscillator section based on the TDA5660P.

Inductor L_3 is made by winding 2 turns of silver-plated wire around a 3-mm drill or pencil. Take the inductor from the former and space its turns evenly by about 2 mm. Insert its terminals into the relevant PCB holes and push it as close as possible to the PCB surface. Solder the terminals at the track side.

Finally, fit four solder terminals at the track side of the board, and one solder terminal (ST_6) at the component side.

Bend the strip of tin-plate screening supplied with the kit at the indicated places to form a box. Join the ends by soldering. Fit the oscillator board into the box and ensure that the track side is about 3 mm above the lower edge of the tin-plate box. Solder the board to the inside of the box at all four sides. Work quickly to prevent overheating, and use a high-power (50-W) solder iron to ensure a smooth and firm connection.

Mount a narrow strip of tin-plate vertically between the two rows of IC pins at the track side of the board as shown in the photograph in Fig. 4. Like the box, this strip is soldered over its entire length.

Insert the panel-mount TV plug into the side panel hole, and secure it by soldering. Use a short length of light-duty wire to connect the centre pin of the plug to terminal ST_6.

Proceed with the population of the motherboard, which contains few parts only. LED D_3 is soldered to terminals ST_{11} and ST_{12}. Four additional solder terminals are fitted to enable the sides of the RF oscillator box to be secured later.

Inspect the two boards for short-circuits and bad solder joints, and correct any errors if necessary. Mount the bottom cover on to the oscillator box, making sure that it does not touch any of the four solder pins which should be about central in the holes provided in the cover. Solder the bottom cover to the sides of the box.

Place the oscillator box on the motherboard and insert the four terminals into their respective holes. Solder them at the track side of the board. Next, solder the four terminals on the motherboard to the sides of the oscillator box.

Adjustment

The adjustment of the modulator is relatively simple and does not require special test equipment.

Connect the modulator to the video source, the TV set and the mains adapter. Tune the TV to a free channel between 30 and 40. Adjust R_1 until the remodulator is tuned to the TV channel. The tuning range of the preset should cover the UHF range between channels 30 and 40. If this is not so, carefully stretch or compress the turns of L_3 until the required range is covered.

Next, adjust the sound channel. Turn

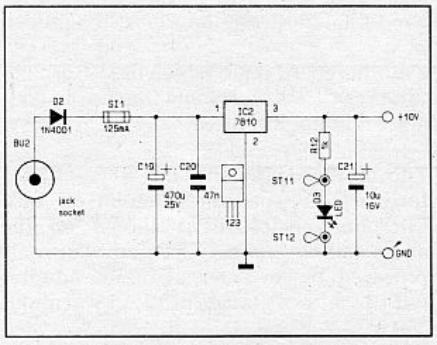

Fig. 2. Circuit diagram of the 10-V regulated power supply.

the core in L_1 until the sound on the TV set is clear and undistorted.

If the modulator works to your satisfaction, mount the top cover on the oscillator box, and secure it by soldering. Next, place the complete assembly into the ABS Microline enclosure. The printed and predrilled front-panel supplied with the kit is fitted last by pressing it firmly from one side so that it clicks into the enclosure. ■

COMPONENTS LIST

Resistors:
R_{11} = 68Ω
R_{12} = 1k0
R_9 = 6k8
R_2;R_3 = 22k
R_4;R_5 = 47k
R_6 = 5k0 preset V
R_1 = 10k preset V

Capacitors:
C_6;C_7;C_8 = 1p5
C_5;C_{11} = 2p2
C_4;C_{10} = 6p8
C_{14} = 100p
C_2 = 220p
C_{13};C_{22} = 820p
C_{16} = 1n0
C_3;C_{15} = 10n
C_9;C_{12} = 22n; ceramic
C_{20} = 47n
C_1;C_{18} = 470n
C_{17};C_{21} = 10µ; 16 V
C_{19} = 470µ; 25 V

Semiconductors:
IC_1 = TDA5660P
IC_2 = 7810
D_1 = BB505B
D_2 = 1N4001
D_3 = LED; 3 mm; red

Miscellaneous:
L_1 = 10µH.
L_2 = balun.
Bu_1 = SCART socket for PCB mounting.
Bu_2 = jack socket for PCB mounting.
SI_1 = fuse; 125 mA.
Qty. 1: tin-plate box (complete).
Qty. 1: TV coax plug.
Qty. 1: PCB-mount fuse holder.
Qty. 11: solder pin.
85 mm light-duty wire.

Below: completed RF oscillator module seen from the PCB track side. Note the screen fitted vertically in between the pin rows of the dual-in-line integrated circuit. This screen is essential to keep spurious radiation of the modulator to a minimum.
Right: top view of the completed RF modulator assembly. The RF oscillator box is mounted on to the main board. Note that the top cover has been removed for an internal view of the oscillator.

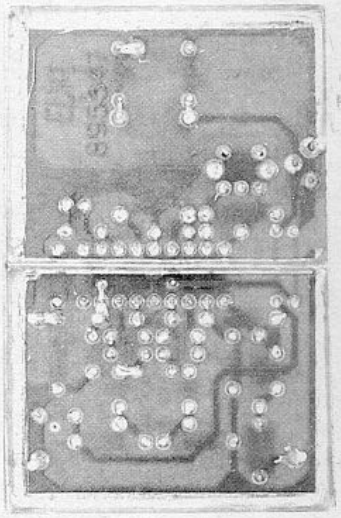

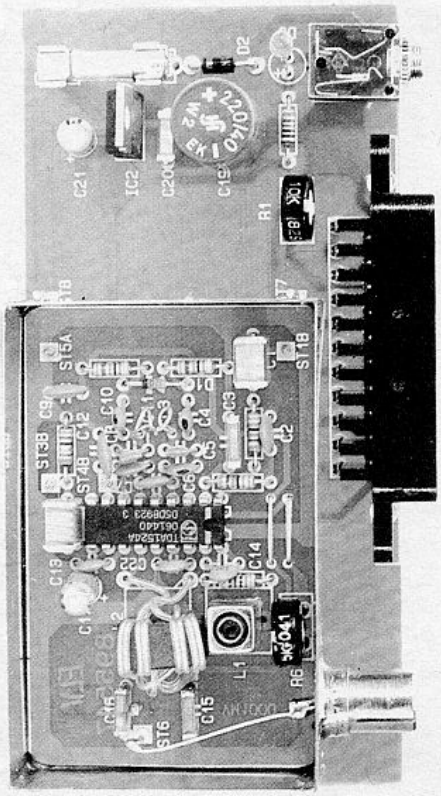

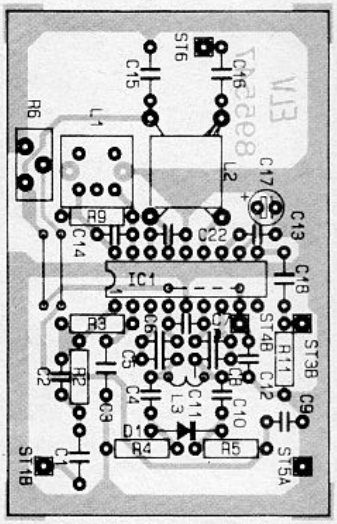

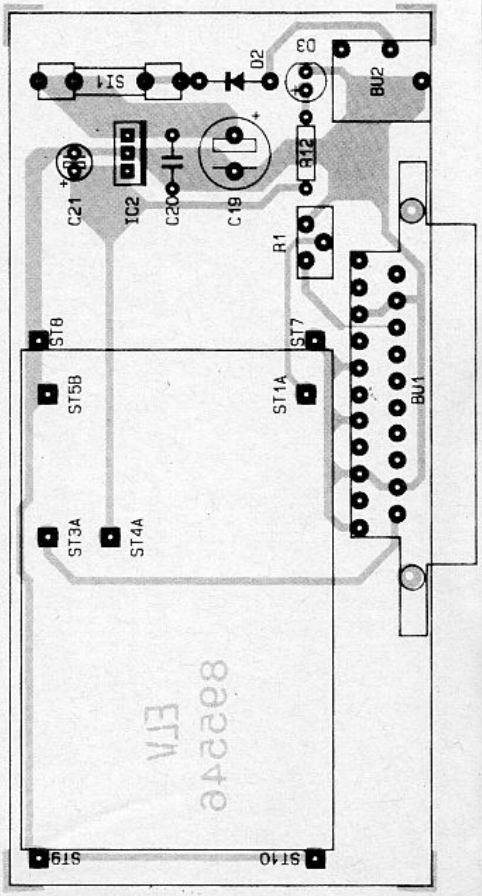

Above: component mounting plan of the RF oscillator board.
Right: component mounting plan of the motherboard.

THE DIGITAL MODEL TRAIN

PART 12 – ADDRESS DISPLAY

by T. Wigmore

The address display is a small extension unit that is used in conjunction with the mother board. It indicates to what locomotive address a given controller is set and whether a given locomotive controller is active.

The address display, which may be fitted to each and every locomotive controller, improves the ease of operation of the system. It is not strictly essential, but will be found very useful with concentrated multi-train operation.

If addresses in the locomotive controllers have been set via the RS232 interface, that is, not by hardware, it is convenient if the address setting is displayed to indicate that it has been set correctly.

Furthermore, the address display indicates whether a given locomotive controller is active. When a controller is taken out of action or when the control of the relevant locomotive is taken over by the serial interface, the corresponding address display is quenched, except in one condition. When the system is in the stop mode and a locomotive address is set via the RS232 interface, the display will indicate that address although the controller is inactive.

Because of this arrangement, addresses may be set in the controllers via the RS232 interface and checked while the system is still in the stop mode. When the system is then actuated, the displays of all non-active controllers will go out.

A controller is not active if:

- it is not connected to the mother board;
- the operating switches are in position "out of action" (high impedance at pins 4 and 5 of the DIN connector);
- a controller with higher priority has been set to the same address;
- the locomotive with the relevant address is given a control instruction via the RS232 inter face.

The last condition needs amplification. Any control instructions to locomotives via the RS232 interface will deactuate the controllers that serve the locomotives with the same address. The control of any locomotive that is operated via the RS232 interface may be reverted to manual by the locomotive enable command <37>. When this instruction is given, the display of the associated controller will light again.

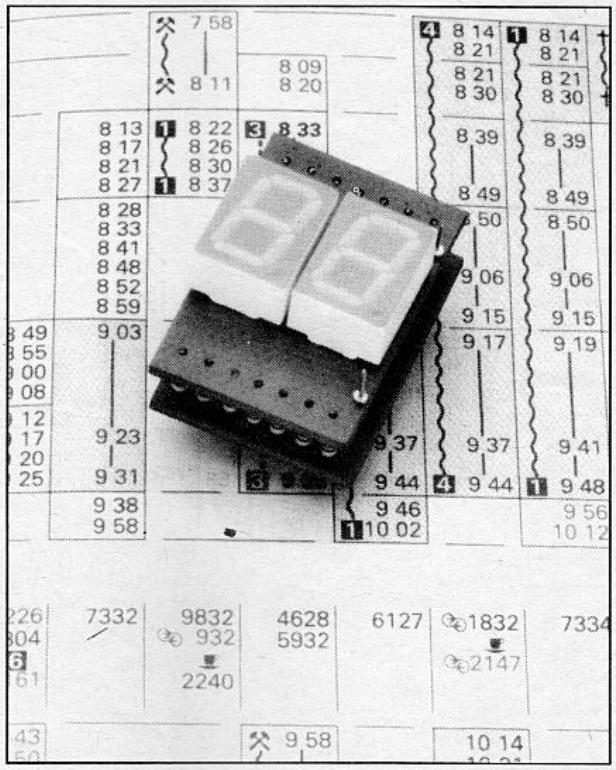

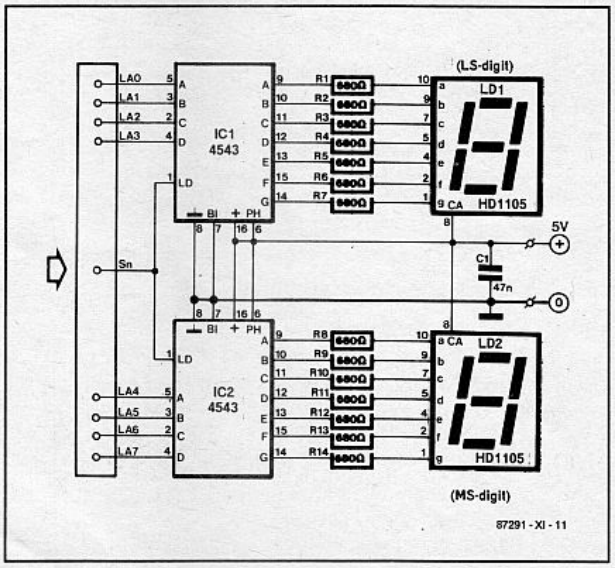

Fig.79. The circuit of the address display is simplicity itself.

Circuit description

As is clear from Fig.79, the circuit of the address display is simplicity itself, because the control is provided by the mother board.

The circuit proper consists of two BCD-to-7-segment decoders with integral register and the displays.

The decoders are connected to the identically-named locomotive address bus on the mother board via lines LA0–LA7 (LA = locomotive address).

Line Sn carries the selection signal that becomes active as soon as a given controller is selected. The selection causes a certain locomotive address set by hardware to be read and then to be written into the registers of the BCD-to-7-segment decoders.

If there is no controller connected, the display is quenched at once by the system writing FFH to it. The display is also quenched if the system signals a controller with higher priority, that is, a higher controller number, which is set to the same address or if the locomotive with the associated address is controlled via the serial interface.

If no address has been set by hardware, the system verifies whether an address for the relevant controller has been given via the RS232 interface. If so, the address that has been converted to BCD format is sent to the display circuit. It is for this reason that the buffer for reading the locomotive address (IC_1 on the mother board) must be a bidirectional type.

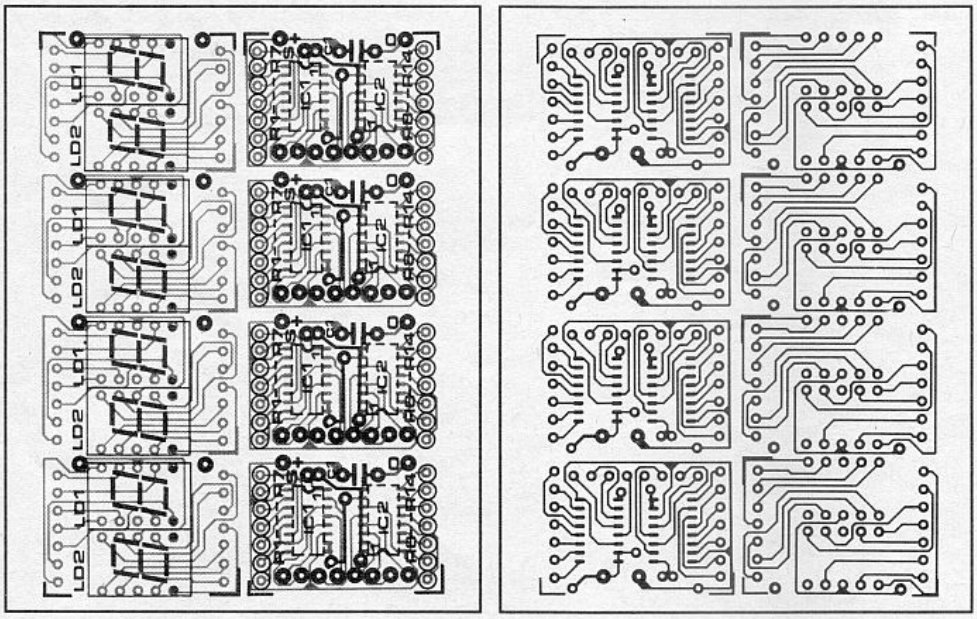

Fig. 80. The printed circuit board is designed for building up to four address display units.

PARTS LIST

R1–R14 = 680R (small types)
C1 = 47 n (preferably SMA type)
IC1, IC2 = 4543 (SMA type)
LD1, LD2 = HD1105 (red)
PCB 87291-9

Construction

The construction of the display involves some rather fiddly work, because to keep the unit small, the components should, if at all possible, be very small or of the SMA (surface mount assembly) type. In the case of the ICs, there is no choice: they must be SMA types.

The boards are not wider than the displays to enable a number of units to be mounted side by side (unless only one locomotive controller is used, of course).

Furthermore, the most convenient type of construction is the sandwich type in which the resistsors are used for making the necessary connexions.

The printed-circuit board in Fig. 80 allows up to four display units to be constructed. The mother board can handle up to 16 displays, so that if the maximum is chosen four PCBs are required.

Before the construction proper can be started, the board must be cut (lengthwise) into two identical strips if four adjacent units are wanted or into eight parts if four discrete units are required. The following notes apply to the building of one unit only.

- Some assembly instructions are given in the caption of Fig. 81.
- Mount both 7-segment displays on to the top "wafer".
- Fit both right-angle wire links to the non-copper side of the lower "wafer".
- Mount decoupling capacitor C_1 at the copper side of the upper "wafer". If an SMD type proves unobtainable, use a small ceramic type and mount this as shown in Fig. 81a.
- Mount IC_1 and IC_2 at the copper side. Pins 1–8 are located at the bevelled side of the devices. These sides should point to one another.
- Connect the two wafers together with the aid of the resistors as shown in Fig. 81b. The copper side of each wafer should face downwards. The resistors should be of the smallest commercial type to ensure a compact unit.
- Loop the power lines in between the two wafers (top right and underneath LD_1) with the aid of two short lengths of equipment wire as shown in Fig. 81c.

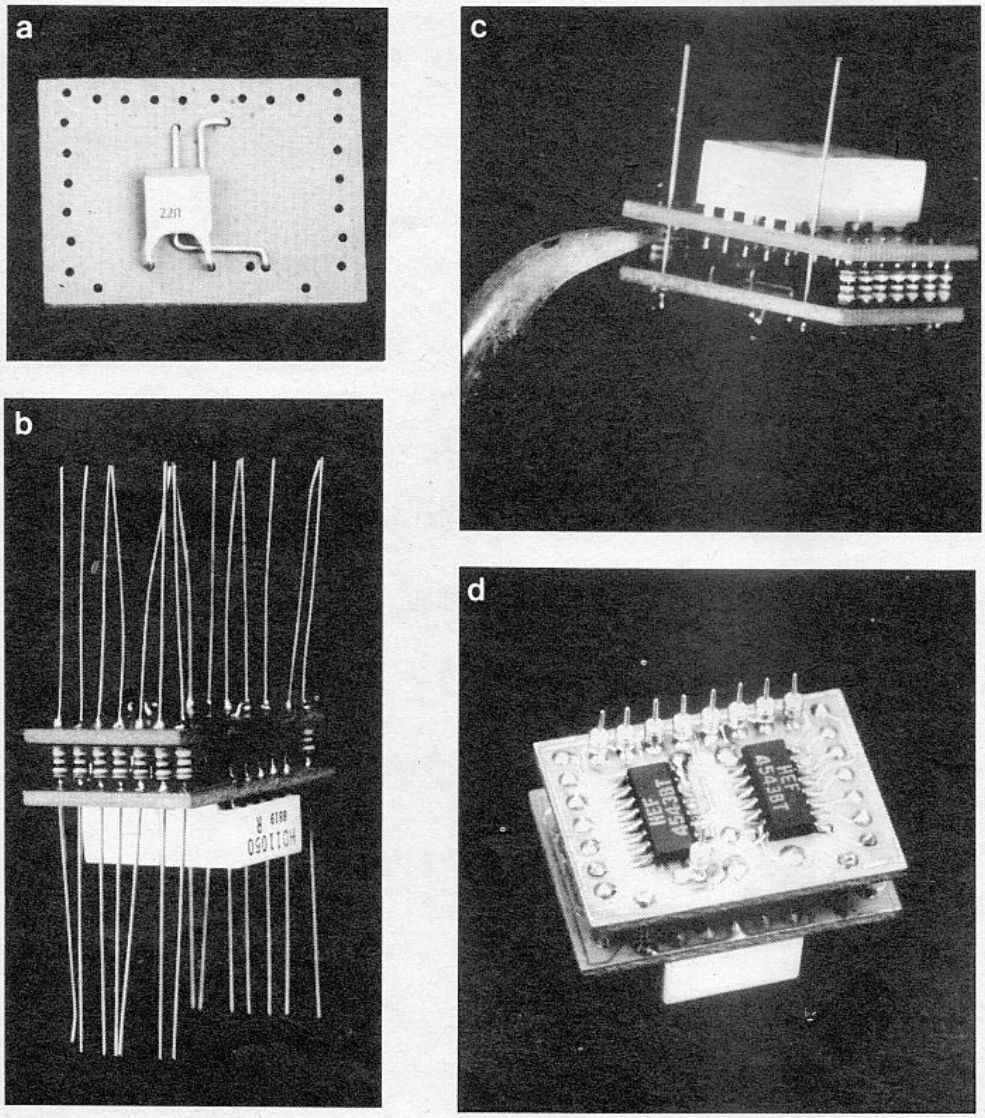

Fig. 81. Construction of the boards as a sandwich: 81a – the decoupling capacitor is laid flat on the board; 81b – through connexions are made with the aid of the resistors; 81c – the power lines are looped through; 81d – the sandwich is ready for connexion to the mother board.

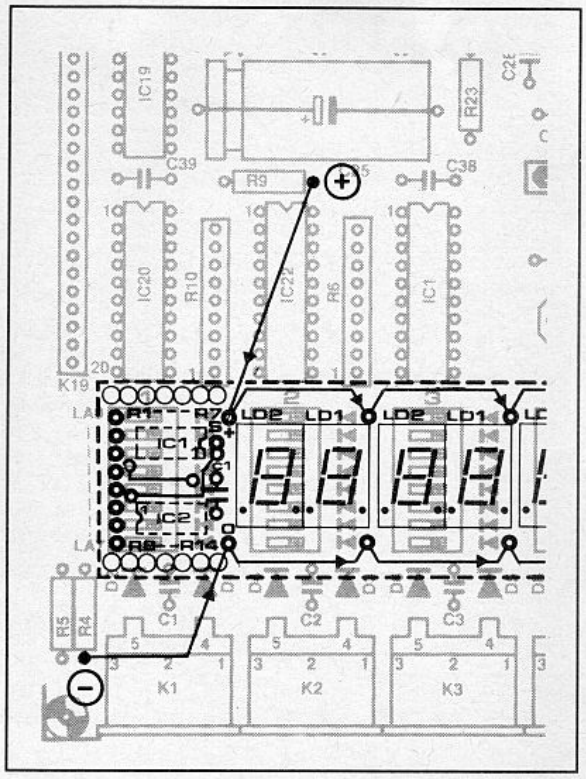

Fig. 82. Showing where connexions from the display unit are made on the mother board.

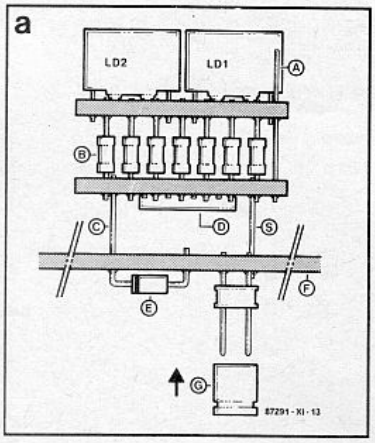

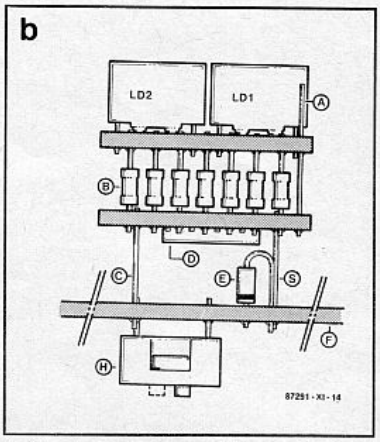

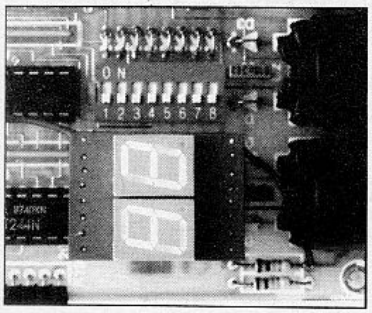

A – supply line earth
B – current limiting resistors
C – connexion loc address bus
D – SMD-type IC
E – diodes for loc addressing
F – mother board
G – jumper
H – DIL switch

Fig. 83. Combination of an address display and hardware for setting locomotive addresses.

Interconnexions

Apart from the power lines, there are nine connexions between the address display and the mother board—see Fig. 82.

The power lines (0 V and +5 V) may be looped to other display units via lengths of normal equipment wire.

Each and every display unit may be used in conjunction with hardware for setting the locomotive addresses—see also "locomotive addresses" in Parts 7 and 8. If that is done, it is convenient to remove certain parts to the track side of the mother board. Two possibilities are shown in Fig. 83.

In the first (Fig. 83a), the eight diodes are fitted at the track side. The connexions to the cathodes may be used for connecting lines LA0–LA7 to the display unit. To make the whole easily removable, the display unit may be provided with a "semi IC socket". The setting of the loc addresses may be effected by fixed wire links or jumpers at the track side of the mother board.

The second design (see Fig. 83b) uses an 8-pole DIL switch at the track side of the mother board for setting the addresses.

Bear in mind that if an address is set by hardware, a locomotive controller can no longer be allocated an address via the serial interface. ■

PROTECTED QUAD POWER DRIVERS

Providing interface between low-level signal processing circuits and power loads, Sprague's UDN2547B and UDN2547EB quad power drivers combine logic gates and high-current bipolar outputs with complete output protection.

Each of the four outputs will sink 600 mA in the ON state. The outputs have a minimum breakdown voltage of 60 V and a sustaining voltage of 40 V. The inputs are compatible with TTL and 5V CMOS logic systems and include internal pull-down resistors to ensure that the outputs remain OFF when the inputs are open-circuited.

Over-current protection for each channel has been designed into the devices and is actuated at about 1.3 A. It protects each output from short circuits with supply voltages up to 25 V. When a maximum driver output current is reached, that output drive is reduced linearly, maintaining a constant load current. If the over-current or short-circuit conditions continue, each channel has an independent thermal limit circuit that will sense the rise in junction temperature and turn OFF the individual channel that is at fault. Foldback circuitry decreases the output current if excessive voltage is present across the output and assists in keeping the device within its SOA (safe operating area).

Each output also includes diagnostics for increased device protection. If any output is shorted or opened, the diagnostics can signal the controlling circuitry through a common FAULT pin.

The UDN2547B/EB can be used to drive various resistive loads including incandescent lamps (without warming or limiting resistors). With the addition of external output clamp diodes, it may be used to drive inductive loads, such as relays, stepping motors, or solenoids.

The UDN2547B is a 16-lead power DIP, while the UDN2547EB is a 28-lead power PLCC for surface-mount applications. Both packages are of batwing construction to provide maximum power dissipation over the temperature range of –20° C to +85° C. ■

HOW TO ORDER

TO PLACE AN ORDER, obtain price and delivery information, request technical literature or applications assistance, contact your local Sprague Semiconductor sales office or sales representative, or:

From U.S. and Canada:
Sprague Electric Company
Semiconductor Group
115 Northeast Cutoff
Box 15036
Worcester, MA 01615-0036
Tel: (508) 853-5000
Fax: (508) 853-5049
Tlx: 203658, 221457

From Europe and Mideast:
Sprague Electric (U.K.) Ltd.
Semiconductor Group
Balfour House
Churchfield Road
Walton on Thames
Surrey KT12 2TD, UK
Tel: (44-932) 253-355
Fax: (44-932) 246-622
Tlx: (851) 926618

From Asia:
Sprague Asia Ltd.
Semiconductor Group
16th Floor, Lap Shun Centre
552-556 Castle Peak Road
Kwai Chung, N.T., HONG KONG
G.P.O. Box 4289
HONG KONG
Tel: (852-0) 428-3188
Fax: (852-0) 480-4292
(852-0) 480-5374
Tlx: (780) 43395

BBD SOUND EFFECTS UNIT

T. Giffard

Phasing, vibrato and reverberation are commonly used sound effects in modern music. The effects unit described here is a high-end piece of audio equipment that will make many musicians and sound engineers sit up. Based on a state-of-the-art bucket-brigade delay (BBD) chip, the unit is capable of many popular sound effects, including ADT, chorus, phasing and real-to-life reverberation.

Under normal circumstances, sound travels at a speed of about 340 m per second. This means that short echoes occur in relatively small rooms already, giving the so-called reverberation effect. Acoustic perception experiments have proved that the human ear is capable of detecting a sound delay as small as 5 ms only (corresponding to a distance of about 1.65 m). In particular, short reflections with their associated differences in regard of level, delay, and spectral composition create an impression of space with the listener.

Most electronic musical instruments are not based on sound created in a resonant cavity of any size or shape, and as a result produce a relatively 'flat' sound. Reverberation may be added by electronic means to add warmth to the sound of these instruments. In the present sound effects units, reverberation is achieved with the aid of adjustable degrees of feedback and attenuation, which results in a remarkably natural effect.

Bucket brigade delay

The drawing in Fig. 1 shows the basic set-up of an analogue delay line based on a bucket brigade memory. The memory is essentially a series of sample-and-hold circuits, each of which consists of electronic switches and capacitors. The analogue signals stored in the capacitors are sampled under the control of a central clock signal. At each clock pulse, the sample is shifted one capacitor to the right, hence the name 'bucket brigade' (the precursor of today's fire brigade).

After *n* clock pulses, the analogue signal is advanced *n* positions in the memory. A double clock is used to prevent the contents of two 'buckets' affecting each other as a result of the shift operation. Hence, clock 1 and clock 2 are in opposite phase.

To ensure acceptable distortion of the input signal as a result of the sampling operations, the clock frequency must be at least two times the highest frequency to be sampled (Nyquist's sampling theorem). A low-pass filter at the input of the bucket brigade delay limits the frequency range to a usable value. The output of the BBD chip also has a low-pass filter, in this case to remove the clock signal component.

Reverberation

Reverberation is an acoustic effect which occurs, in principle, in every room of which the walls have sound reflecting properties. The sound reflections are noted by generating a short acoustic sound burst, e.g., a hand clap. This sound will reach the ear directly as well as indirectly via reflections. The time it takes any reflection to reach the ear is in direct proportion to the time taken by the sound to reach the point where it is reflected. The amplitude of the reflection depends on the length of the path and the acoustic properties of the reflecting surface. Stone walls, for instance, absorb very little sound, whereas curtains have virtually no reflective properties. In many cases, sound reaches the listener via different paths. The amplitude of the reflections as a function of time is illustrated in Fig. 2.

The decay time is the time that lapses before a particular sound is so weak that it is no longer perceived. This parameter depends on the construction of the listening room and the materials used. A natu-

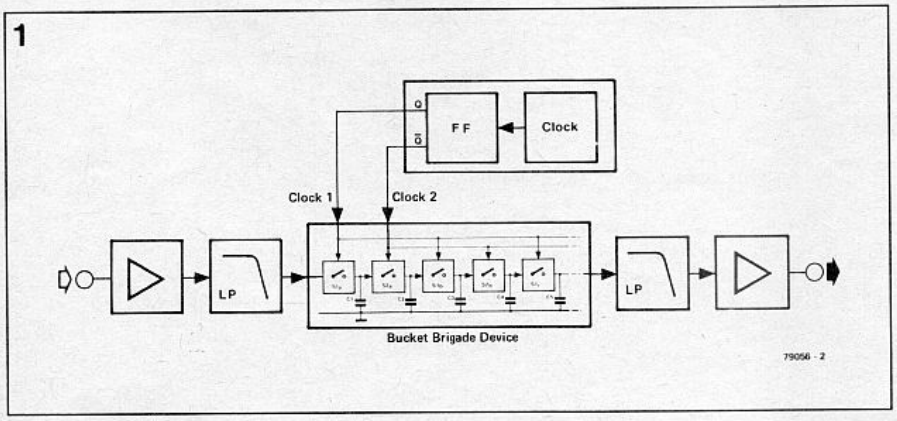

Fig. 1. Block diagram of the bucket-brigade sound effects unit.

ral sounding reverberation effect requires at least 1,000 reflections per second, which, as a further proviso, must reach the listener at a certain irregularity.

Reverberation: the electronic way

Figure 3a shows the simplest configuration of a reverberation unit based on controlled feedback. The associated amplitude-*vs*-time diagram is given in Fig. 3b. To achieve a decay effect, the amplitude of the reflections is reduced as a function of time with the aid of a voltage attenuator. In practice, the reverberation time, t, is defined as the time required to reduce the sound energy by a factor of 10^6 (60 dB). In Fig. 3a, this time may be calculated by counting the number of 'needle pulses' between the instant the sound is generated and the instant its amplitude is 60 dB smaller. Next, the number of needles is multiplied with the delay time, τ, of the reverberation unit, hence,

$$t = 60/\alpha\tau$$

where α is the attenuation per passage.

A practical example: a reverberation unit has an attenuation of 3 dB and a delay of 50 ms. An attenuation of 60 dB is, therefore, reached after 20 passages, each of which introduces a delay of 50 ms. The reverberation time, t, is 20×50 ms = 1 s.

In practice, reverberation times of the order of one or two seconds pose problems because they require an extensive (i.e., long) delay line. Acceptable results for reverberation times longer than about 0.5 s are only achievable with digital delay lines. Lower attenuation and a greater number of passes are usually not feasible in view of the risk of oscillation.

A second problem arises from the equal distances travelled by the generated reflections. Such a constant pattern can only occur in a spherical room, which, in the case of the above example (50-ms delay time) has a radius of 16.6 m. Evidently, such a room is at best rare in the real world.

An annoying side-effect of equally long t reflections is the creation of a comb-filter response—see Fig. 3c. At a delay of 20 ms, the distance between two peaks equals 100 Hz. The comb filter effect introduces a variation in the attenuation which is simple to calculate if the normal attenuation of the circuit is known. From the above example, a normal attenuation of 3 dB means that the signal is attenuated by a factor of 0.7 after a single passage through the reverberation unit. The variation in the attenuation owing to the comb filter effect is (1+0.7)/(1–0.7), i.e., 5.7 times or about 15 dB. Obviously, an amplitude ripple of 15 dB is not acceptable for hi-fi stereo applications. Yet, many reverberation units produced in the past

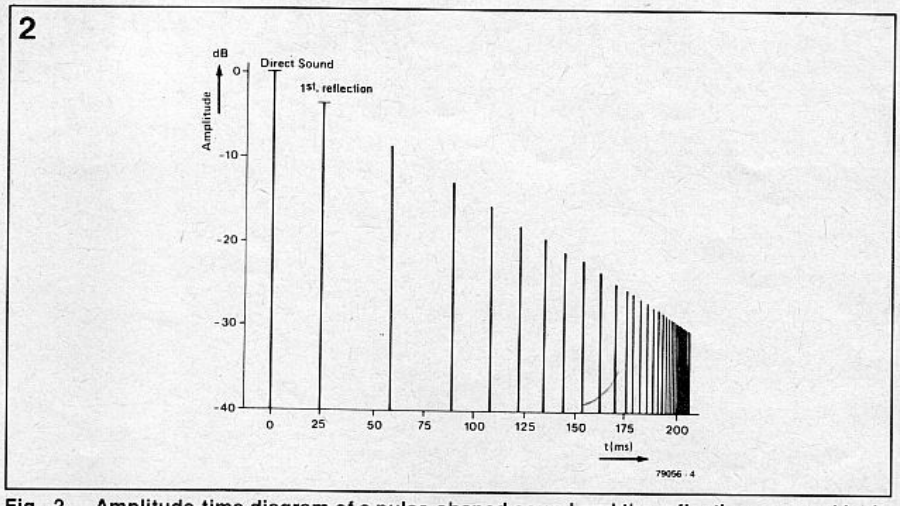

Fig. 2. Amplitude-time diagram of a pulse-shaped sound and the reflections caused by it.

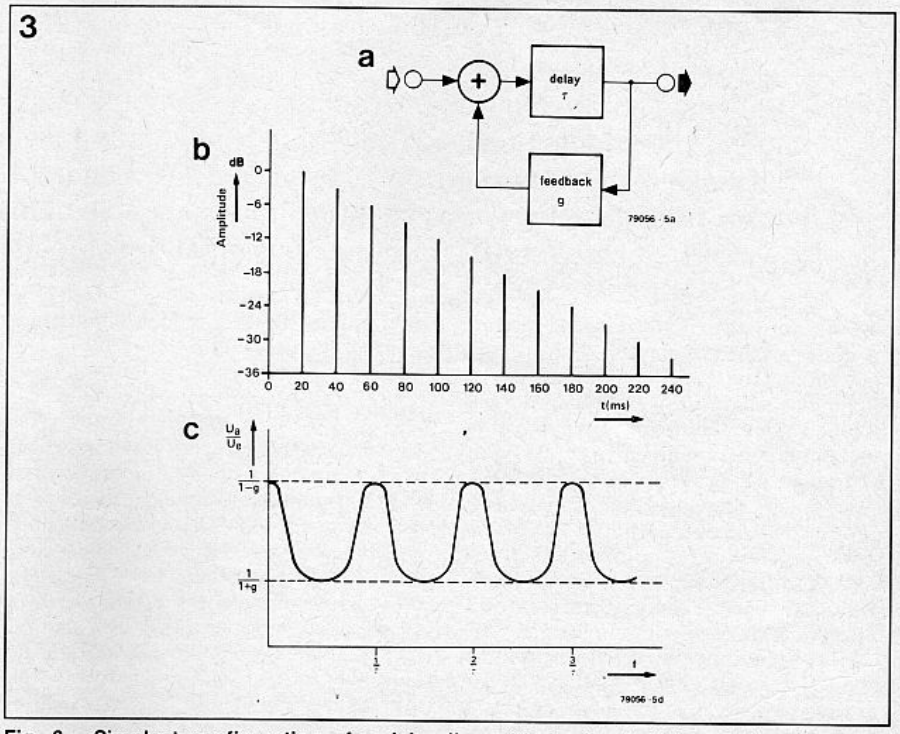

Fig. 3. Simplest configuration of a delay line with feedback (3a) and the associated amplitude-time diagram (3b). The frequency response of such a delay unit is not unlike that of a comb filter (3c).

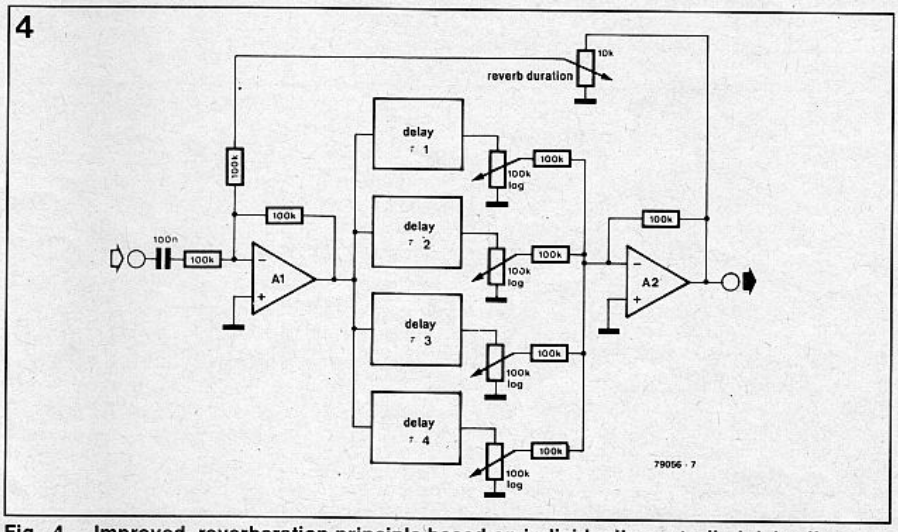

Fig. 4. Improved reverberation principle based on individually controlled delay lines.

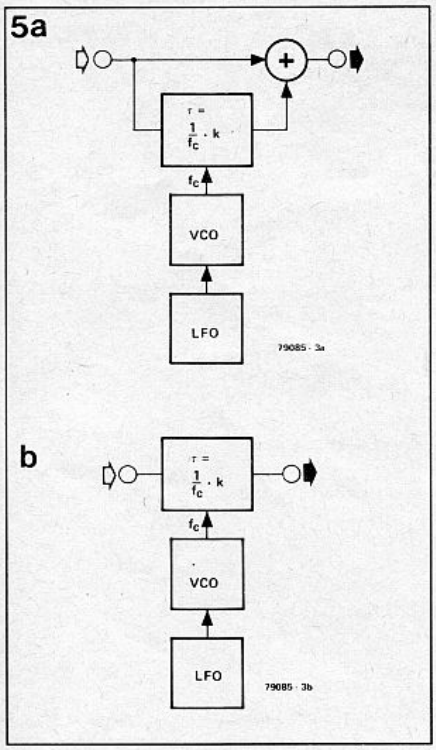

Fig. 5. Basic circuits for phasing (5a) and vibrato (5b).

used the above principle simply for lack of a better (electronic) alternative.

Multiple reverberation

A naturally sounding reverberation effect can only be achieved by using different delays of non-related durations. The block diagram of a reverberation unit based on this principle is shown in Fig. 4. From practical experiments, at least four delays are required for acceptable results. The sound effects unit described here has six different and non-related delays, while the attenuation for each of these is adjustable to give an optimum room simulation.

The delays used in the sound effects unit allow an estimate to be made of the size of the simulated room. A sound delay of 10 ms corresponds to a total path length of 3.3 m, or a wall distance of 1.65 m. The maximum setting, 100 ms, simulates a wall distance of 16.5 m.

Sound effects

The BBD sound effects unit offers a variety of sound effects which may be set to individual liking with a large number of controls. As examples, the degree of feedback for the delayed signals may be adjusted; the 'clean' (input) signal may be mixed with any one delayed signal. Furthermore, the unit allows a single delay to be used.

The **ADT-effect** (automatic double-tracking) is commonly used in modern music technology to give the sound more substance. Basically, the signal is briefly delayed (τ=1–5 ms) and then mixed with the original. If used in a multiple way, the result is the **Chorus-effect**. Here, the delay time is not constant but subject to small, irregular changes caused by modulation of the clock signal by a pseudo-random signal generator, for which the sound effects unit has an external input. The chorus-effect may use one or more delay lines in the unit, provided the output signal is not fed back to the input. The delayed signal is, therefore, simply added to the output signal.

Vibrato and **phasing** are based on modulation of the clock signal with a triangular, low-frequency, signal supplied by, for instance, an LFO (low-frequency oscillator). The vibrato-effect is obtained by using the delayed signal only, while for phasing the modulated as well as the delayed signal are added to the output signal. The different ways of generating these two sound effects are illustrated in Figs. 5a and 5b. The sound effects are rather different also. Strong vibrato brings to the mind a worn tape recorder or gramophone with speed regulation problems, while phasing is associated by many with the Hammond-effect based on doppler shift and achieved with the aid of rotating loudspeakers.

Phasing uses the previously mentioned comb-filter response that occurs at short delays (refer back to Fig. 3). The modulation of the clock signal shifts the points of maximum attenuation (poles) of the comb filter (Fig. 6) periodically, and so causes a spatial sound effect.

Both vibrato and phasing use delays smaller than 10 ms, which allows ready use of a BBD IC.

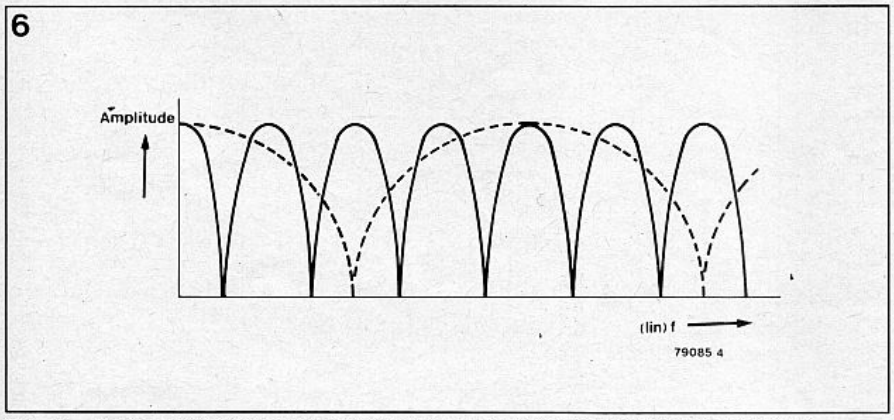

Fig. 6. Typical comb filter response of a delay line. The sound effect is 'phasing'.

MN3011/MN3101 BBD chip set

The Type MN3011 from Panasonic (a Matsushita company) contains a 3328-stage bucket-brigade delay line in PMOS technology. The pin-out and internal configuration diagram in Fig. 7 shows that six taps on the delay are bonded out to pins. The delay times associated with these pins are suitable for reverberation applications. The shortest reverberation time is available at pin 9, the longest at pin 4. The actual delay times achieved with the IC are determined by the frequency of the clock signals which are applied in opposite phase to pins 2 and 10. The maximum and minimum delay times at two clock frequencies, 10 kHz and 100 kHz, are given below:

BBD output (pin)	Delay at f_{cl}=10 kHz (ms)	Delay at f_{cl}=100 kHz (ms)
1(9)	19.8	1.98
2(8)	33.1	3.31
3(7)	59.7	5.97
4(6)	86.3	8.63
5(5)	139.5	13.95
6(4)	166.4	16.64

The operating voltage of the MN3011 is 15 V typical and 18 V maximum. At a supply voltage of 15 V, the current consumption is 8 mA typical. The direct voltage at the signal input must be adjusted for minimum distortion. Starting from a level of half the supply voltage, a potential change of up to 2 V may be necessary. The amplification of the BBD chip is 0 dB typical (unity gain), but may lie within 4 dB of this value. The maximum input level is stated as 1V_{rms} at 2.5% transient harmonic distortion (THD). At the nominal input level of 770 mV_{rms} (1 kHz), the THD is 0.4% typical.

A bandwidth of 10 kHz is achievable at a clock frequency of 40 kHz. From practical measurements on the chip, the noise level is between –70 and –72 dB at a clock of 40 kHz.

The pinning and internal configuration of the clock driver chip Type MN3101 are given in Fig. 8. External components are used to determine the clock oscillator frequency, which is divided by two and subsequently shaped to provide the opposite-phase clock signals for the MN3011. The MN3101 has an on-board voltage source that supplies about 14/15V_{dd}. This voltage is required for the BBD chip. The current consumption of the MN3101 is 3 mA typical at 15 V. ❑

The final part of this article will be published next month.

TEMPERATURE COMPENSATION FOR LCD MODULES

byM. Clarkson

Liquid crystal display (LCD) modules have grown in popularity over the past few years because they are easy to use and provide an attractive display. Unfortunately, they have a troublesome drawback: poor temperature compensation.This article shows a way of improving that.

LCD modules come in a variety of sizes: from one line of 16 characters to four lines of 20 characters. They contain all the necessary drive circuits, so that interfacing them with microprocessors is very simple—see Fig. 1.

Unfortunately, the poor temperature compensation of these devices makes it necessary, in order to ensure optimum contrast of the display, to vary the input signal from about 400 mV to 800 mV over the temperature range 0–50 °C. This signal variation may, of course, be obtained manually with the aid of a simple potentiometer, but a much neater way is automatic temperature compensation.

When I started on this problem, I first of all tried the circuit shown in Fig.2. This uses a darlington configuration to boost the temperature coefficient of the base emitter voltage and to reduce the required base bias current.

As the base-emitter voltage decreases with rising temperatures, the current in in R_1 drops. This reduces the voltage across R_2, which in turn increases the voltage across R_e and consequently the emitter current. Most of the emitter current flows in the collector circuit and thus as the emitter current increases, the voltage across R_c increases. It follows that the voltage across R_c is directly proportional to the temperature.

Assuming that the current in R_1 and R_2 is small compared with the current in R_e, we can show that the gain of the circuit is related to V_e:

$$i_1 = V_{be} / R_2 = V_b / R_2$$

and

$$i_2 = V_c / R_2 = V_e / R_e.$$

In both cases it is assumed that there is no base current.

$$dV_{be} / R_1 = di_1 \text{ or } dV_{be} = di_1 \times R_1,$$

in which dV_{be} is the change in base-emitter voltage with temperature.

Now,

$$dV_b = dV_{be} \times R_2 / R_1.$$

Since V_{be} is large compared with dV_{be}, it may be assumed that it is constant, so that $dV_b = dV_e$.

$$dV_e / R_e = di_e \qquad (i_e = i_c)$$

$$dV_{be} \times R_2 / R_e \times R_1 = di_c$$

$$dV_c = dV_{be} \times R_2 \times R_c / R_1 \times R_e$$

$$dV_c / dV_{be} = A = R_2 \times R_c / R_1 \times R_e,$$

where A is the gain;

$$R_2 = V_b / i_1;\ R_1 = V_{be} / i_1;\ R_c = V_c / i_2$$

and $R_e = V_e / i_2$

Substituting, we obtain:

$$A = V_b \times V_c / V_e \times V_{be}$$

Since $V_b = V_{cc} - V_e - V_{be}$, this can be reduced to:

$$V_e = (V_{cc} - V_{be}) \times V_c / / (V_{be} \times A + V_c)$$

With this equation we can estimate the required V_e and thus the resistor values required.

To calculate the emitter voltage we need to know the gain required and this is:

$$A = T_{e(R)} / T_{e(T)},$$

where $T_{e(R)}$ is the required temperature coefficient and $T_{e(T)}$ is the temperature coefficient of the transistor.

$T_{e(T)}$ of the darlington configuration is about 3.2 mV / °C owing to the small collector current (this causes a relatively large internal emitter resistance, which reduces the effective temperature coefficient of the base-emitter junction).

When using the circuit with an LCD module, you must take account of the 27 kΩ internal pull-up resistor—see Fig. 3.

With the Hitachi module , we require 600 mV at 25 °C. In Fig. 2 we see that with a current of 500 µA through the transistor and one of 163 µA through the internal resistor, the value of R_c will be

Fig. 1. Graphical representation of a 4-digit LCD module.

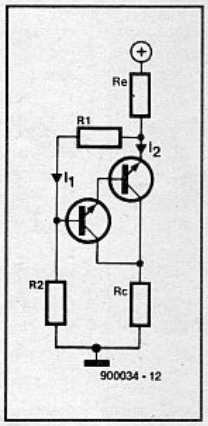

Fig. 2.

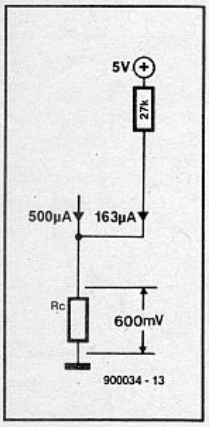

Fig. 3.

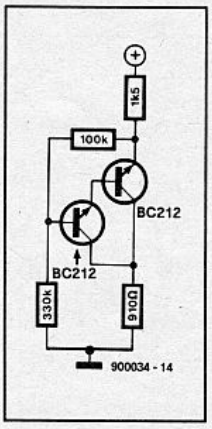

Fig. 4.

600 mV / 663 μA = 905 Ω. A practical value here is 910 Ω.

The 27 kΩ pull-up resistor means that the V_{cc} used in the equation is reduced by

$$910 / (27{,}000 + 910) \times V_{cc} = 163 \text{ mV}.$$

This makes V_{cc} = 4.84 V.

The V_{be} of the darlington pair is about 1 V with 500 μA flowing in the collector circuit, so that

$$V_{be} = (4.84 - 1) \times 0.6 / (1 \times 2.5 + 0.6) = 0.743 \text{ mV}$$

Let i_1 = 10 μA, so that i_e = 510 μA at 25 °C. Then:

$$R_e = 0.743 \text{ mV} / 510 \text{ μA} = 1.46 \text{ kΩ};$$

$$R_1 = 1 \text{ V} / 10 \text{ μA} = 100 \text{ kΩ};$$

$$R_2 = (5 \text{ V} - 1.743 \text{ V}) / 10 \text{ μA} = 325.7 \text{ kΩ}.$$

The final circuit is shown in Fig. 4: the output from the prototype was linear over the temperature range of 0–50 °C. At 0 °C, V_c = 425 mV and at 50 °C, V_c = 850 mV. ■

SQUARE-WAVE GENERATOR

by M. Clarkson

Many circuits nowadays require a square-wave generator for which invariably a separate NE555 is used. Since many of such circuits frequently have an unused opamp or voltage comparator available, why not use that to build the square-wave generator?

If the circuit that requires a square-wave generator has a spare opamp or voltage comparator, the diagram in Fig. 1 may be used to realize the generator.

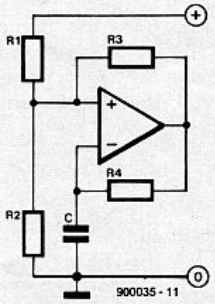

Fig. 1. Basic circuit of proposed square-wave generator.

The circuit works by capacitor C being charged and discharged to two different potentials created by R_1, R_2 and R_3. The time taken by C to reach the higher potential is the high period of the output, while that taken by C to discharge to the lower potential is the low period of the output.

To calculate the values of the circuit elements, we must simplify the circuit. Firstly, R_1 and R_2 can be reduced to their Thévenin equivalent as shown in Fig. 2.

When V_{out} is low, R_3 pulls V_{sense} to a lower voltage, V_{T-}. Capacitor C is then discharged via R_4 to the level of V_{T-}. When the potential across C, V_c, reaches V_{T-}, the output swings high. When V_{out} is high, R_3 pulls V_{sense} from V_{T-} to V_{T+}. Capacitor C then charges via R_4. As soon as V_c reaches V_{T+}, the output swings low and the cycle is completed.

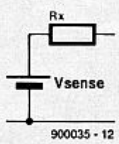

Fig. 2. Thévenin equivalent of R_1 and R_2.

If a spare opamp is used, the output frequency is limited to a range of 10 Hz to about 10 kHz, but this is sufficient for the majority of applications.

The two states of the circuit, ignoring R_4 and C, are shown in Fig. 3. The circuits in Fig. 3 enable us to calculate V_{T-} and V_{T+}:

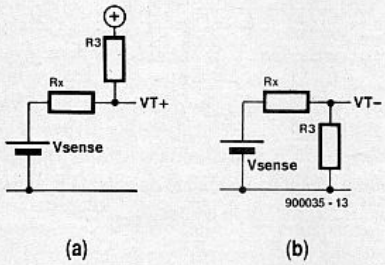

Fig. 3. The two equivalent states of the circuit: (a) ON state (*C* charges) and (b) OFF state (*C* discharges).

$$V_{T-} = V_s \times R_3 / (R_3 + R_x) \quad [1]$$

$$V_{T+} = (V+ - V_s) \times R_x(R_x + R_3) + V_s. \quad [2]$$

So far I have assumed that the opamp requires no bias current—see Fig. 4. This is not true and, although the current is generally small, it can affect the circuit to quite an extent if R_1 and R_2 are too large. It is necessary that the current flowing through R_1 and R_2, that is, $V_c / (R_1 + R_2)$, is large compared with the bias current of the opamp.

I have also assumed that the output of the opamp swings between 0 V and $V+$. However, most opamps have a limited swing: if the one you use can not swing to within 10% of the supply voltage, you must take that into account in the calculations.

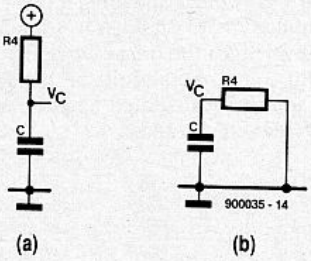

Fig. 4. The two states of R_4 and C: (a) ON state; (b) OFF state.

If, in Fig. 4., we make the difference between V_{T+} and V_{T-} small compared with $V+$, we may assume that C is charged and discharged at constant currents. The time, t, taken by a capacitor to charge at constant current is:

$$t = dVC / i, \quad [3]$$

where dV is the voltage C has to charge to and i is the charging current.

The charging current is $(V+ - V_c) / R_4$ and the discharge current is V_c / R_4.

If we want C to charge to V_{T+} and to discharge to V_{T-} in equal times, the charging and discharge currents must be equal, that is,

$$(V+ - V_c) / R_4 = V_c / R_4. \quad [4]$$

so that

$$V_c = V+ / 2 \qquad [5]$$

Voltage V_c is also equivalent to V_{sense}, that is, the mid-point between V_T- and V_T+.

To recap, I have said that the difference between V_T- and V_T+ must be small compared with $V+$. This allows us to assume that a constant current flows through C.

Also, V_c must be equal to $V+/2$ to ensure that C is charged and discharged at the same rate.

Then, I have assumed that the output swings between 0 V and $V+$.

Furthermore, I have not taken into account the output resistance of the opamp. This is all right as long as R_3 and R_4 are sufficiently large.

Another aspect that must be borne in mind is the common-mode voltage, V_{cm}, of the opamp. As said, V_{sense} must be $V_c / 2$, which may be higher than V_{cm}.

Let us now calculate some circuit values: R_4 and C may be determined by deciding on the frequency, f, and the allowable charging current, i_c: $R_4 = V_c / 2i_c$, $f = 1 / T$, where $T = 2t$.

From [3] we obtain

$$C = it / dV.$$

In terms of frequency,

$$C = i / dV \times 2f, \qquad [6]$$

where dV is the difference between V_T+ and V_T- and this must be small compared with $V+$. At the same time, it must be large compared with the offset voltage of the opamp. Since the offset voltage is usually about 5 mV, dV should be not less than 200 mV. It is calculated by subtracting [1] from [2], which yields:

$$dV = V+ \times R_x / (R_x + R_3). \qquad [7]$$

Since $V_{sense} = V_c = V+ / 2$, R_1 must be equal to R_2, so that $R_x = R_1 / 2$. From this it follows that

$$dV = V+ \times R_1 / (R_1 + 2R_3). \qquad [8]$$

The value of R_3 is then given by

$$R_3 = R_1 / 2\,(V+ / dV - 1) \qquad [9]$$

Resistor R_1 must be small enough to ensure that the current through R_1 and R_2 is large compared with the bias current, I_b, for the opamp, that is, $V+ /2R_1 >> I_b$.

Let us now use a quarter of a Type LM339 voltage comparator as a practical example—see Fig. 5. The first thing to note is its open-collector output, which means that a pull-up resistor is required at the output. This resistor must be sufficiently small not to introduce any errors in our calculations.

The V_{cm} of the LM339 is greater than $V+ / 2$, assuming that $V+ = 5$ V. The bias current is around 0.25 µA, so that the current, i_c, through R_1 and R_2 may be set to 25 µA. We then obtain the folowing values:

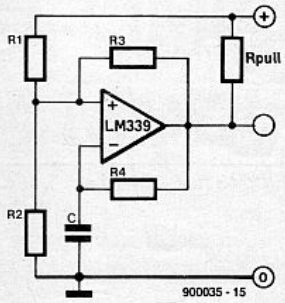

Fig. 5. Square-wave generator based on 1/4 Type LM339 voltage comparator

$$R_1 = V+ / 2i_c = 100\ k\Omega$$

$$R_2 = R_1 = 100\ k\Omega$$

Since the offset of the LM339 is <5 mV, we may take $dV = 200$ mV. Then, from [9],

$$R_3 = 1.2\ M\Omega$$

Assuming we want $f = 5$ kHz and a charging current, $i = 25$ µA, then, using [7], we obtain a value for C of 12.5 nF.

The value of R_4 is

$$R_4 = V_c / 2i_c = 50\ k\Omega.$$

When the output of the LM339 is high, the circuit in Fig. 6 may be used to calculate the optimum value of the pull-up resistor, R_{pull}.

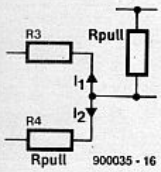

Fig. 6. Simplified circuit to calculate the voltage drop across R_{pull}.

If we allow a drop of 200 mV across R_{pull}, and taking into account that

$$i_1 = (V+ - V_c) / R_3 = 2\ \mu A \text{ and}$$

$$i_2 = (V+ - V_c) / R_4 = 50\ \mu A,$$

we obtain a value for R_{pull} of

$$R_{pull} = 200\ mV / (i_1 + i_2) = \\ = 200 / 52 = 3.8\ k\Omega.$$

In practice, the value may be reduced to, say, 2.2 kΩ and even further for low-impedance loads, but take care as the low output voltage of the LM339 may suffer.

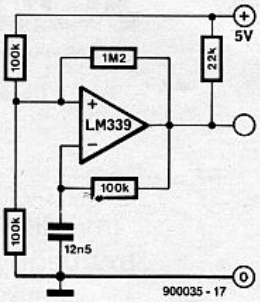

Fig. 7. Diagram of the final circuit of a 5 kHz square-wave generator.

The completed circuit is shown in Fig. 7. The prototype under test yielded a high period of 94 µs and a low period of 96 µs. The final frequency was 5263 Hz. It was calculated that the capacitor value should be 12.5 nF to give a frequency of 5208 Hz. Since a 12 nF type was used in the prototype, the actual frequency was rather higher, but well within satisfactory tolerance.

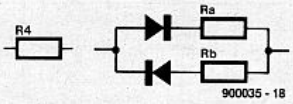

Fig. 8. Replacing R_4 by a resistor-diode network as shown enables the mark-to-space ratio of the output to be altered as required.

The high and low periods, that is, the mark-to-space ratio of the output voltage, may be varied by replacing R_4 by two resistors and two diodes as shown in Fig. 8. I shall leave the derivation to you. ■

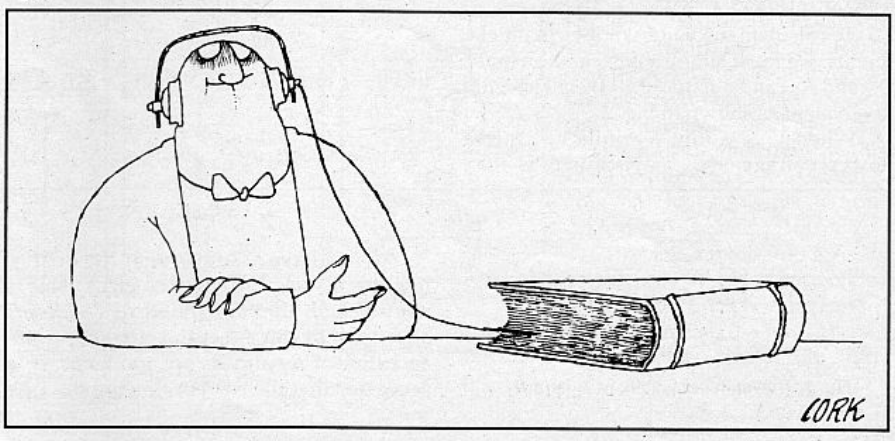

Nicads

To charge or not to charge?

For all their undoubted advantages, batteries have one major disadvantage, they will eventually run out and almost always at the most inconvenient time. The pain in our wallet is a familiar feeling as the time for replacing them arrives since they, like everything else today, do not get any cheaper. If you are a consistent 'sufferer', there is a remedy for this problem, namely rechargeable nicads. Although initially more expensive than conventional batteries they offer considerable savings in both money and convenience. Assuming one observes a few elementary rules when using nicads, they should have an extremely long life.
The following article takes a look at the type of applications for which nicads are particularly suitable – i.e. when they will prove more economical than primary cells – and explains how their effective life can be prolonged by careful use.

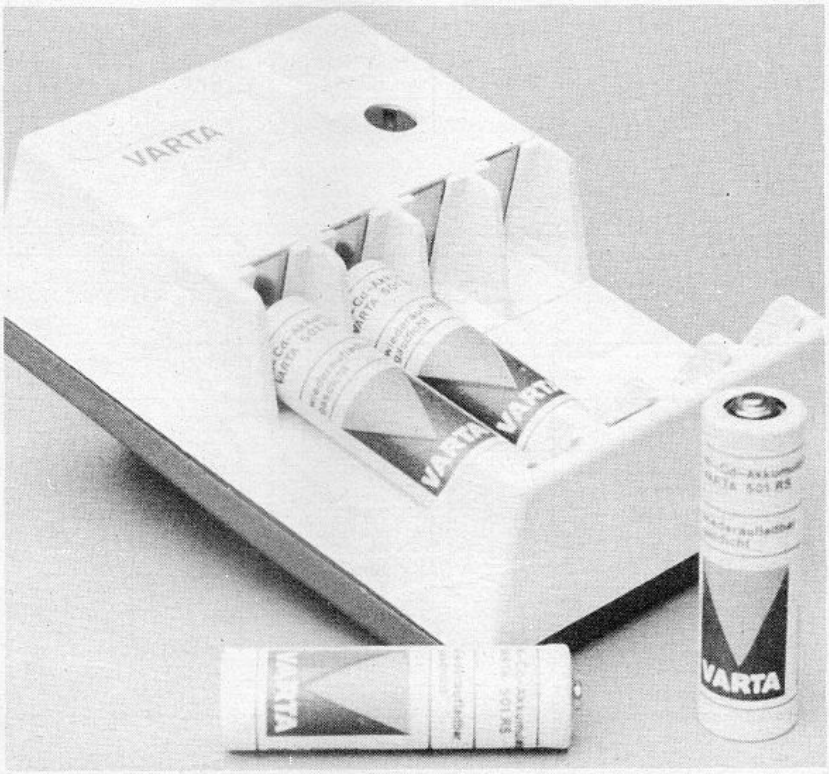

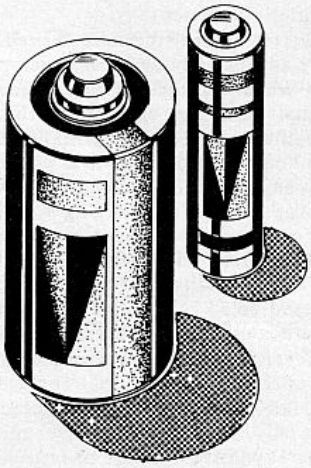

There are a number of factors to consider when faced with the choice of using conventional 'dry' batteries or rechargeable nicads. Although nicads could cost as much as three times the price of dry batteries, the fact that they are rechargeable offers a potential saving in the long term. They are mechanically robust, less prone to electrolyte-seepage than dry cells, have an extremely low internal resistance, and a virtually constant voltage for over 90% of the discharge period.
The latter two features are particularly useful. The low internal resistance means that it is possible to connect larger numbers of nicad cells in series and allows higher flash frequencies in battery-operated flash units, whilst the stable working voltage means that there is less chance of pocket calculators becoming unreliable as the batteries begin to run down. Similarly, there is less risk of cassette recorders or cine-cameras slowing down during recording or filming – a problem encountered with dry batteries which are exhausted but can 'feign' a normally charged state when switched on after periods of disuse. Nicads are much more honest: they either provide a current at a steady voltage or nothing at all.
However nicads also have one or two disadvantages: the average discharge voltage is only 1.2 V (as opposed to 1.5 V for dry batteries), so that for example, 4 'D' cells (HP 2) would provide only 4.8 V, instead of 6 V. Not every piece of equipment will operate satisfactorily with a 20% reduction in supply voltage. This, in turn, may lead to over-frequent recharging, since only the first third of the discharge cycle (when the working voltage may exceed 1.2 V) is then used.
Generally speaking the capacity of nicads and of conventional primary cells is roughly the same, although there are special manganese-alkali cells with greater capabilities than those of nicads. However it must be borne in mind that the capacity of a cell, and in particular zinc-carbon primary cells, is to a greater or lesser extent dependent upon the discharge rate. Nicads are particularly suited to high discharge rates and continuous use, whereas primary dry cells are intended for intermittent service at lower discharge currents. Thus a nicad will have a

Table 1a

I.E.C. no.	RO3	KR 15/51	KR 27/50	KR 35/62	6F 22
U.S.A.S.I.	AAA	AA	C	D	–
Berec dry cells	U16	HP7	HP11	HP2	PP3
Varta nicad cells	18RS	501RS	RS 1.8 K	RS 4 K	TR 7/8
SAFT nicad cells	–	VR 0.5	VR 2 c	VR 40	–
Berec nicad cells	–	RX6	RX14	RX20	RX22

Table 1b

	HP7 AA	HP11 C	HP2 D	PP3 –
Nominal voltage dry cell	1.5 V	1.5 V	1.5 V	9 V
Nominal voltage nicad cell/battery	1.2 V	1.2 V	1.2 V	9.0 V
capacity (Ah) dry cell/battery	0.15-2	0.4-6	1-10	0.05-5
Capacity (Ah) standard (sinterelectrode) nicad cell/battery	0.5 0.45	1.8 2.0 1.65	+	0.09 0.11

All capacities stated at 5 hour discharge rate, temp. = 20°C

Table 1a. This table lists the type numbers of nicad equivalents for the most commonly-used sizes of dry cells. A number of manufactures produce a range of intermediate sizes. (1/2 A, 1/3 AA, RR, F, etc.).

Table 1b. Comparison of main characteristics of nicads and equivalent dry cells/batteries. The considerable variations in the stated capacity of dry cells is the result of variations in discharge rate and in the type of cell construction. The highest capacities are obtained with manganese-alkali cells, which in general have four times the energy content of standard dry cells.

greater effective capacity in such applications as a cassette recorder being operated for long periods.

The capacity of nicad batteries of identical dimensions often differs from manufacturer to manufacturer. However in contrast to dry batteries, the nominal capacity of nicads is always indicated on the case, and these figures can be compared directly with one another.

Of course the single greatest advantage of nicads, namely the fact that they are rechargeable, inevitably entails a practical inconvenience for the user – the need for a charger.

Choosing the right battery – shape, capacity, charge time and price

Having decided to opt for the use of nicads there comes the question of which type of cell to buy. If the nicads are being used to replace conventional dry batteries, then the choice of size is already decided. Table 1a shows the more commonly available nicad equivalents for popular dry cells, while table 1b lists their basic differences.

In the case of dry cells, the effective capacity can vary by as much as a factor of 10, depending upon the type of cell and the discharge rate. The lower figure as a rule refers to standard zinc-carbon cells operating under unfavourable discharge conditions (5 hour continuous discharge), whilst the higher figure refers to manganese-alkali cells.

The nominal capacity of nicad cells is usually expressed for a five hour discharge C/5. That is to say, the capacity which is obtained when fully charged cells are discharged at such a rate as to bring them to an end point of 1.0 V in 5 hours. The figures obtained for a one hour discharge are approximately 10 to 15% lower, whilst a longer discharge period of 10 hours results in a negligible increase in capacity.

The influence of the discharge current on the cell voltage and on the cell capacity (as a result of increased internal resistance) is slightly greater in the case of smaller cells (capacity less than 100 mAh), but is still virtually negligible when compared to conventional dry cells. A number of manufacturers produce cells of different capacity for a given size, thus for example it is possible to buy AA cells with a 0.5 and 0.6 Ah capacity.

The time taken to fully recharge a standard sintered nicad cell is approximately 14 hours, assuming the maximum normal charging current is used (i.e. the cell is not being fast-charged with the aid of a charger which will automatically switch off once the fully-charged state is reached). Charging at the normal rate can be done with a very simple circuit (e.g. a half-wave rectifier plus series resistor).

If shorter charge times are desired, then there are specially designed quick-charge cells which will accept three times the normal charging current. With these cells the charge cycle is completed in 4 to 6 hours. In addition, it is possible to use automatic quick-chargers, which are capable of fast-charging the cell in 15 to 60 minutes. Depending upon the manufacturer, these 'superchargers' can be used with special quick-charge sintered nicad cells or ordinary standard sintered nicads. Generally speaking, however, successful operation is only guaranteed if both the charger and cells are from the same manufacturer. Naturally, these quick-charge units are fairly expensive. The use of fast chargers

is discussed in more detail later in the article.

Points to check before buying a nicad cell

1) Make sure that the equipment or circuit in question will operate satisfactorily at the lower supply voltage provided by the nicad(s). In the case of battery-operated devices this should not normally present a problem. To obtain reasonable use from the battery the equipment should continue to function properly with a 1 V cell voltage.
2) Check to see whether the equivalent nicad cell will actually fit into the battery compartment of the equipment for which it is intended. In the case of cylindrical cells there should be no difficulty, however it can happen that the 9 V battery packs will not fit, even though they conform to IEC 6F22 dimensions.

Using Nicads

Charge cycle

Nicads are normally charged with a constant current of roughly one tenth of the cell's nominal capacity. It should be stressed that the charging current must be fairly constant (or limited to a safe value). Due to the very low internal resistance of nicad cells, constant voltage charging is to be avoided, since there would then be the possibility of very high currents being drawn by the cell, leading to overheating or thermal runaway.

The cell does not actually store the charging current for the entire duration of the charge cycle. At the start and end of the charge period energy provided by the charging current is used to reconstitute the electrodes and in the production of gas. For this reason, the amount of current supplied during the charge cycle must be greater than the nominal capacity of the cell. A charge factor of 1.4 is used, i.e. the cell must be provided with 1.4 of its nominal capacity to reach the fully charged state. Thus with a normal charging current of $C_{5/10}$ we arrive at a charge time of 14 hours.

If the nominal charge time is exceeded, the cell starts to overcharge, i.e. it ceases to store the charge current, but rather converts it into heat. Providing this occurs with the normal charging current and the cell temperature remains within the limits prescribed by the manufacturer, nicad cells are capable of withstanding long term overcharging. Depending upon the manufacturer and type of cell, the minimum temperature for normal charging is between 0 and 10°C, whilst the maximum is between 40 and 60°C. Optimum performance is obtained between 10 and 25°C. Within this range it is possible to charge the cell to 100% of its nominal capacity. At lower temperatures the capacity of the cell starts to fall so that it takes less time to become fully charged, and the cell is less able to withstand overcharging. At higher temperatures, the

1

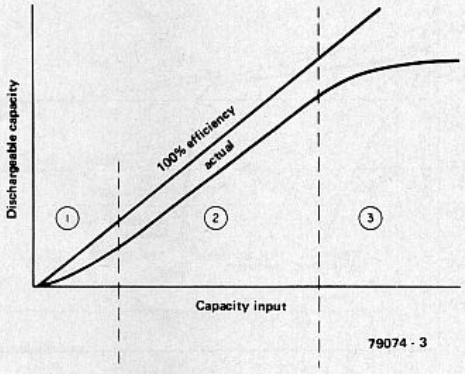

2

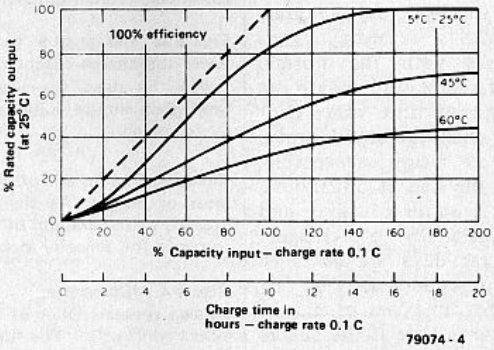

3

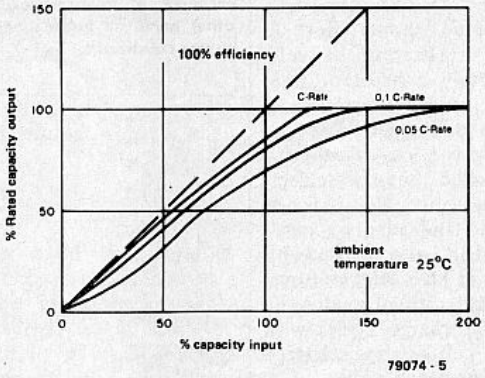

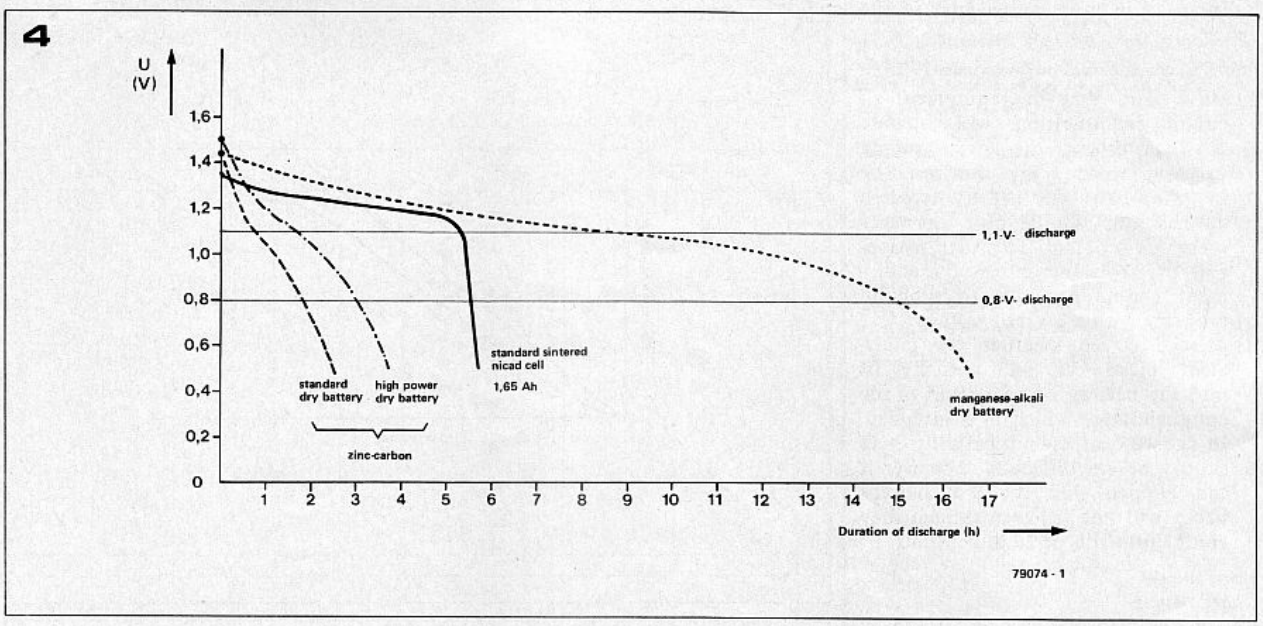

charge acceptance of the cell sinks even further; at around 55°C it falls by some 30%. The more often it is charged at high temperatures, the greater the danger of permanent damage to the cell.

It is important to check the manufacturer's specifications regarding overcharging of cells with the normal charging current, since the maximum permissible length of time varies. For example one manufacturer quotes 20,000 hours as being acceptable, a second draws the line at 500 hours, whilst a third is more cautious and states that occasionally overcharging for up to several days should have no untoward consequences. The last remark is valid for all types of nicads, although no harm is done if the charge cycle is ended once the cell is fully charged.

Charging the cell with a current lower than the normal charge current is possible, but there are a couple of drawbacks. The charge factor of the cell rises to around 2, whilst repeated charging at lower than recommended currents can cause a temporary reduction in the effective capacity of the cell. A charge current of less than half the prescribed value should not be used for regular recharging of cells which are completely exhausted. It is possible to use smaller currents to recharge partially discharged cells, although again there is a loss of capacity due to the so-called 'memory'effect. The cell as it were notices that it is not being fully charged and adapts accordingly. This effect is also caused by repeated charging at high temperatures. The lost capacity can normally be restored by several charge cycles with 'full' current, the cell being discharged fairly rapidly between each cycle.

Overcharge

If a cell is required to be kept fully charged (and is regularly discharged completely) then it is possible to leave the cell on *continuous* charge at a current equal to or just a little below the normal value. If the cell is used in a standby mode, however, so that it discharges only rarely and then not completely, it is recommended that, once fully charged, the current be reduced to a holding value of between 20 and 50% of the normal charging current.

Figure 1. Charge acceptance of a nicad cell. At the start and end of the charge cycle only a portion of the charge current is stored by the cell (sections 1 and 3). During overcharge almost all of the energy input to the cell is either consumed in the production of gas or converted into heat.

Figure 2. The greater the temperature, the lower the charge acceptance of a nicad cell, hence the need for slightly higher charge rates. Care should, however be taken to avoid overcharging.

Figure 3. Charge acceptance is better at high rates of charge. As the charge current decreases, so the amount of overcharge required to regain full capacity increases.

Figure 4. Comparisons of the discharge voltage characteristics of nicads and conventional dry cells. The discharge conditions represented in this graph (i.e. continuous discharge at a fairly high constant current) are extremely disadvantageous for normal zinc-carbon cells. With intermittent discharge (i.e. the cell is given time to recuperate between discharge periods) and a smaller discharge current, standard zinc-carbon cells will provide roughly the same capacity as nicad cells of equivalent size, whilst special high power zinc-carbon cells can achieve approximately twice the capacity of nicads. The capacity of manganese-alkali cells on the other hand are less dependent upon the discharge conditions.

Fast charging

Fast charging, using a current above the prescribed normal charging current, is possible with most types of nicads, however once again opinions differ among manufacturers.

Generally speaking, it is acceptable to fast charge fully discharged cells at rates of two to three times the normal charging current for periods of several hours – with the proviso that the temperature is greater than 20°C and not more than roughly 45°C. At temperatures lower than this the normal charging current should under no circumstances be exceeded.

Fast charging should not be undertaken without a charger with a timer or temperature sensor to automatically terminate charge or reduce it to safe levels. Obviously the use of a timer as control element requires that the initial state of the cell is known (in practice this usually means complete discharge). To take an example, fast charging a standard nicad cell at double the normal charging current is only permissible providing the temperature is not less than 20°C and the charge cycle does not exceed 6 hours. An exception to the rule, however, are the standard nicad cells from SAFT (all the cells of the VR-series, with the exception of the VR 10), which can be charged at three times the normal current for up to 10 days.

5

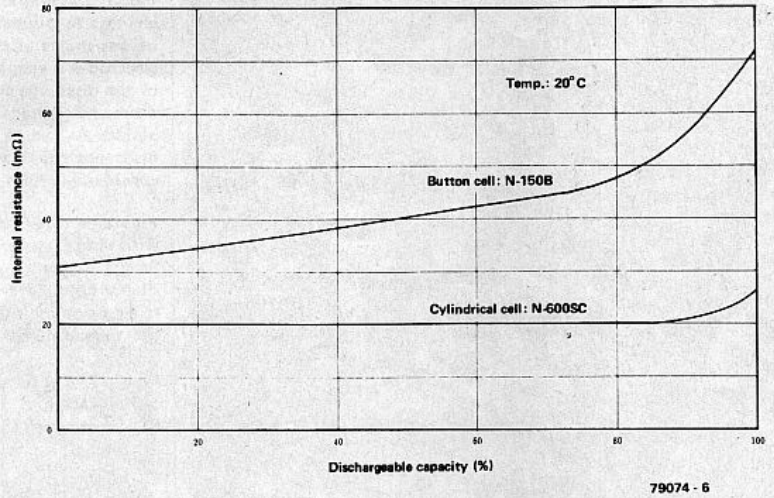

6a

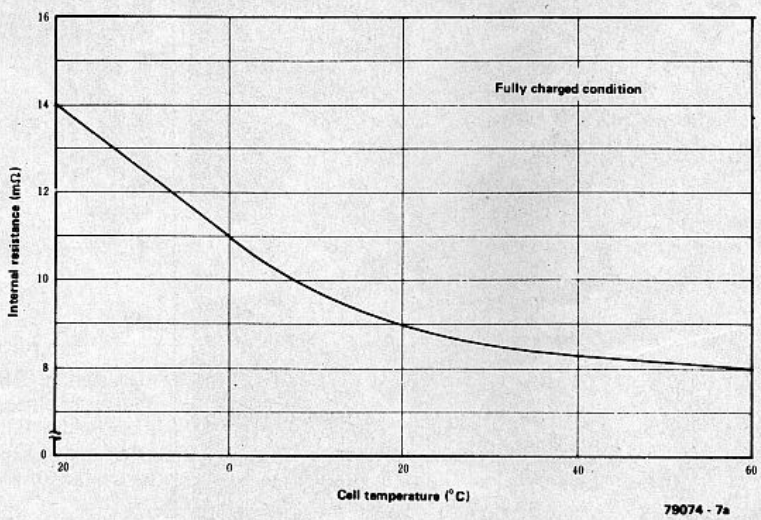

6b

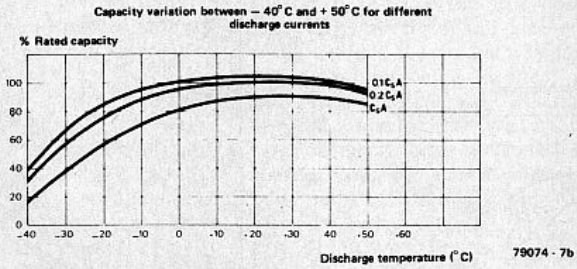

Most sintered nicad cells can be fast charged at rates even greater than those mentioned above (depending upon the type and manufacturer), however cells cannot normally be fully charged under these conditions and the same precautions must be taken to prevent overcharging and overheating. For example, an AA-cell (nominal capacity 450 mAh) which has been completely discharged, is fast charged for 45 minutes at 10 times the nominal charging current (450 mA) and then topped up at the normal current (45 mA). Overcharging at the normal rate is then possible.

Discharge cycle

Again depending upon the manufacturer, nicads can be discharged over a temperature range of between roughly –40 to –20°C and +45 to +60°C.

The nominal capacity of a cell is stated for a temperature of 20°C. At higher temperatures the effective capacity of the cell rises marginally, whilst at lower temperatures there is a significant reduction. At 0°C the capacity may be between 5 and 25% down on the nominal value.

The internal resistance of the cell exhibits a negative temperature coefficient. As the temperature falls the internal resistance rises considerably (e.g. by as much as 75% over a temperature range of +60°C to –20°C). The increased internal resistance naturally causes a drop in the cell voltage under low temperature discharge conditions.

Because of internal resistance, the capacity of the cell is also affected by

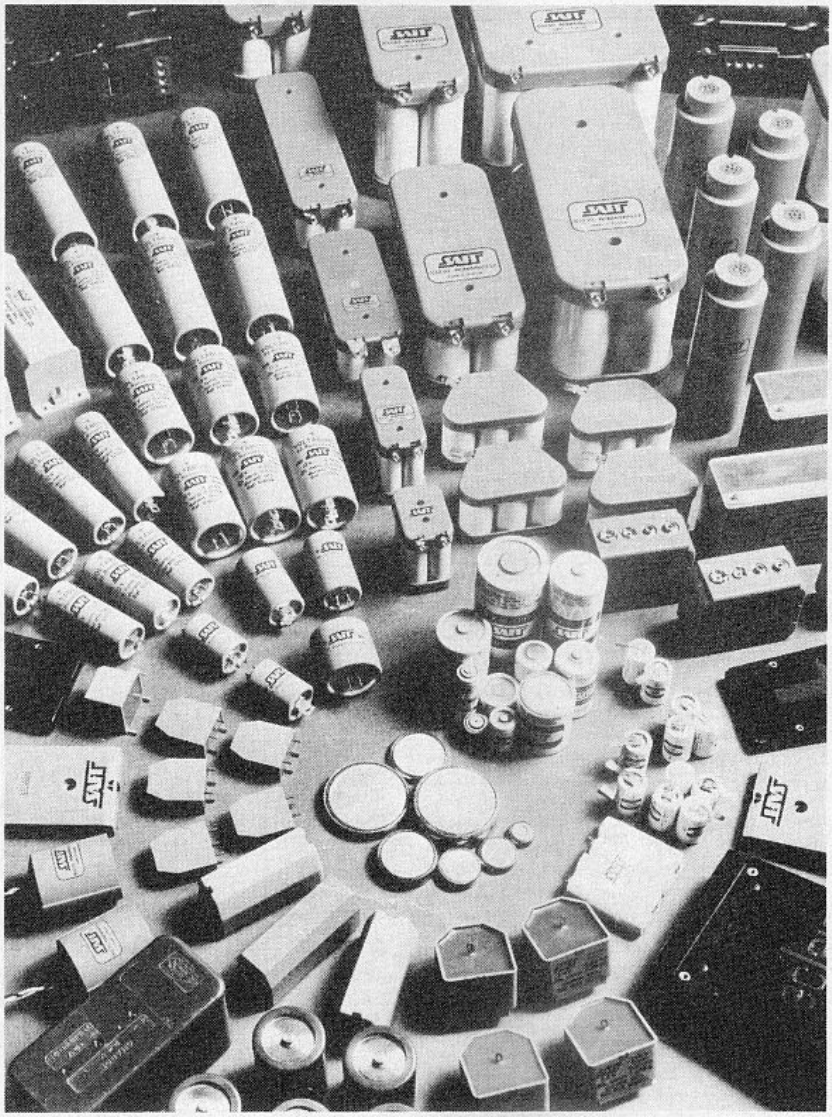

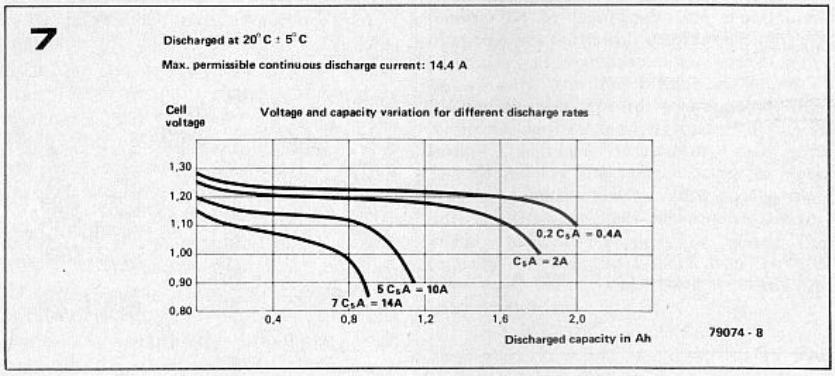

Figure 5. Variation of internal resistance for changes in dischargeable capacity. The internal resistance of cylindrical cells with sintered electrodes is virtually constant for almost 90% of the discharge cycle, with the result that the discharge voltage is also constant for this period. As can be seen, however, the internal resistance of massplate button cells varies considerably with capacity.

Figure 6a. Variations of internal resistance with temperature.

Figure 6b. The greater the discharge current, the greater the effect of internal resistance at low temperatures.

Figure 7. The effect of discharge current on cell voltage and dischargeable capacity for a size C nicad cell (SAFT VR 2 C).

the discharge rate – the greater the discharge current the smaller the capacity. The relationship between capacity and discharge rate (i.e. how much the capacity falls for a given increase in discharge current) is determined by the cell's internal resistance, which in turn is largely determined by the size and physical construction of the cell. As far as construction is concerned, a basic distinction can be made between sintered and non-sintered cells. Almost all nicad cells intended to replace conventional cylindrical batteries are of the sintered-electrode type, whilst in the case of so-called 'massplate' button cells and 9 V battery packs (which in fact are built up of button cells) non-sintered cells are the norm. The internal resistance of sintered cells is on average something between a quarter and a tenth that of non-sintered types, and remains constant over virtually the entire discharge cycle. The internal resistance of non-sintered cells, however, rises to between 3 and 5 times its original value. Non-sintered types do have one slight advantage, in that they have a lower self discharge rate – more of this later.

Irrespective of the construction of cell, it is a general rule that the larger the cell (i.e. the greater the capacity of the cell), the smaller the internal resistance. However different manufacturers often state different internal resistances for cells of identical dimensions and capacity! Thus for size AA cells, one finds internal resistances of between 15 and 35 mΩ (milliohms), for C cells values between 10 and 20 mΩ, and for D type cells resistances around 5 to

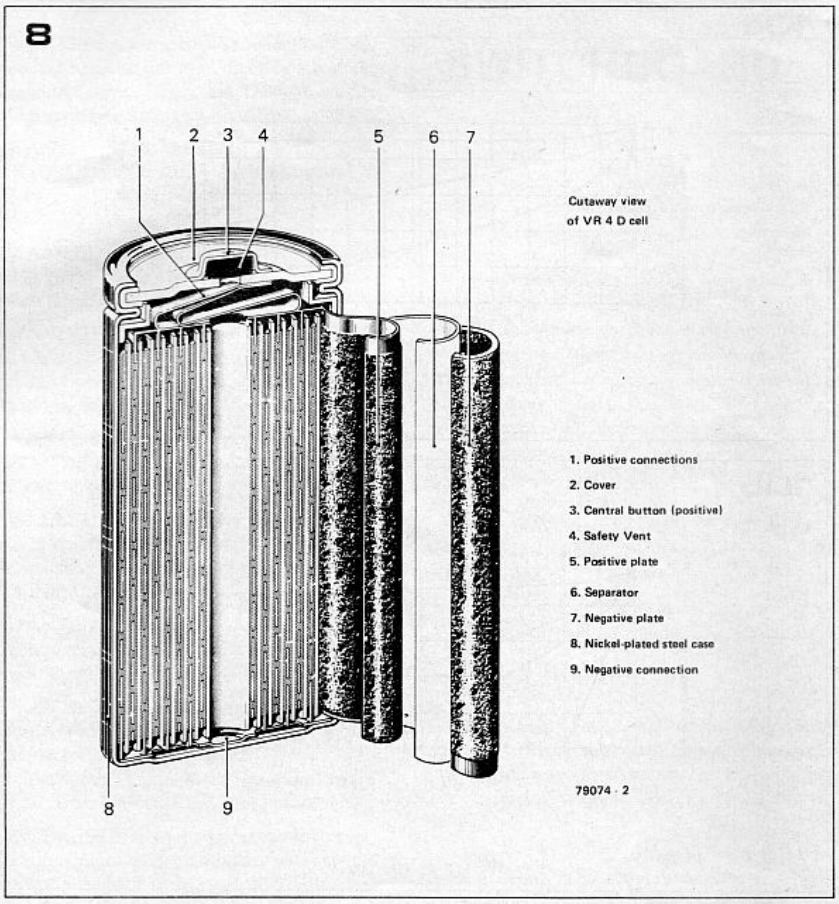

Figure 8. Construction of a cylindrical nickel-cadmium cell with sintered electrodes. The case is hermetically sealed, however a resealing safety vent on the top cover of the cell enables gas which has built up due to excessive charge or discharge rates to be released, thereby preventing the cell from rupturing. Repeated venting will result in a loss of electrolyte and permanent degradation in the cell's performance.

Figure 9. Cell voltage characteristic during cell reversal. Excessive reverse charge (where e.g. large numbers of cells are connected in series) can result in permanent damage to the cell.

Figure 10. Self discharge rates of massplate button cells (top) and sintered cells (bottom) for different temperatures. As can be seen, the nonsintered cells have the better charge retention characteristics.

15 mΩ. A good quality manganese-alkali cell will have an internal resistance of approximately 300 mΩ when new, rising to around 900 mΩ when 20% discharged and several ohms when almost exhausted.

For the majority of applications the internal resistance of nicad cells can to all intents and purposes be disregarded, since it is several hundred percent smaller than that of conventional dry cells. However in cases where extremely high discharge rates are required, such as the powering of radio controlled model planes and ships, the effect of the internal resistance on discharge current and cell capacity must be taken into account. For example, if a cell is discharged at a rate of four times its nominal capacity (e.g. at 4 A in the case of a 1 Ah cell), the effective capacity of the cell is reduced by approx. 30%. The maximum permissible continuous discharge current is determined by the amount of heat generated in the cell, and, depending upon the type of cell and the manufacturer, is somewhere between 4 and 10 times the nominal capacity. With adequate ventilation or if the cell is being operated in a pulsed mode, considerably higher discharge rates are possible – up to 150 times the nominal capacity in the case of certain button cells. For such specialised applications, however, one should always carefully observe the manufacturer's specifications on the cell, and if in any doubt seek advice from the company's engineers.

For all applications the behaviour of nicads when fully discharged is worth attention. When several nicads are connected in series (i.e. whenever a supply voltage of greater than 1.2 V is required), it can happen that one cell discharges before the rest. In such a case it is possible that the polarity of the cell is reversed and is then effectively charged the 'wrong way round' by the remaining cells. This can lead to the production of gas, a build-up of internal pressure, gas venting and the lose of electrolyte. Repeated or substantial loss of electrolyte results in permanent deterioration in the cell's capacity and cycle life. For this reason care should be taken to avoid excessive discharching. The risk of cell reversal and consequent damage is greater under heavy load conditions and also when larger numbers of cells are connected in series.

As a result of both heat production and polarity reversal (in series connections), cells can be permanently damaged through short circuits. If the short occurs externally, i.e. in the circuit which the cell is powering, the resulting extremely high current may cause considerable damage on sensitive components or on the tracks p.c.b., not to mention the risk of personal injury. It should be remembered that the top cover and shell of the case are connected directly to the electrodes of the cell and it is almost always advisable to take the precaution of including a safety fuse in the live lead of the supply.

Shelf life and charge retention

Nicad cells can be stored virtually indefinitely in any state of charge at ambient temperatures between approximately −40°C and +50°C. Fully or partially charged cells gradually lose capacity as a result of self-discharge however; sintered cells more so than non-sintered cells. The rate of self-discharge varies with temperature, charge retention being improved at lower temperatures. At 40°C the cell will have completely discharged within a few weeks, whilst at room temperature a fully charged cell with still deliver 60 to 80% of its capacity after 3 months. At temperatures below 0°C capacities of 80 to 90% can be obtained even after several months. Because of the effect of different storage temperatures and times it is normally not possible for the buyer of nicad cells to know what state of charge new cells will be in. For this reason one should always fully recharge new cells before they are put into service.

Expected life

As long as they are not subjected to abusive treatment, nicad cells can be charged and discharged upwards of 500 times. As the number of cycles increases,

9

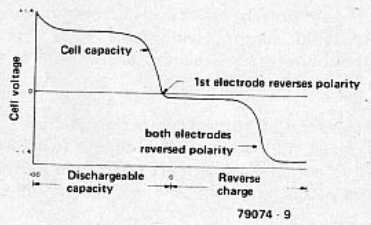

10a

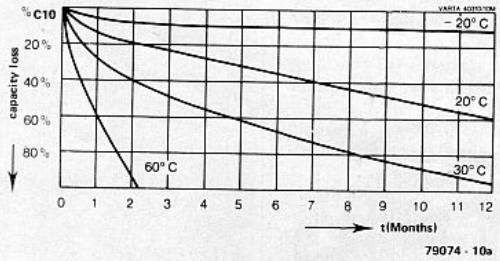

10b

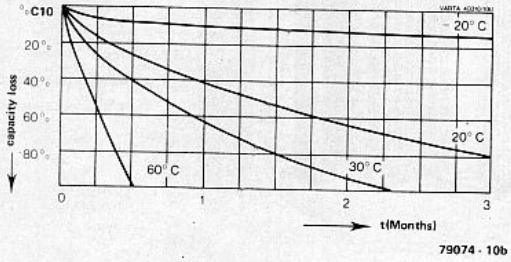

there is a gradual loss of capacity. It is considered that the useful life of the cell has ended when its capacity has dropped to around 70 to 80% of its nominal capacity. When this point is reached will depend upon the average ambient operating temperature (high temperatures shorten a cell's life) and the average depth of discharge.

Although incomplete discharging increases the cycle life of the cell, it should not significantly affect the total energy output of the cell during its useful life. In practice, however, it is often possible, with a little luck, to reach 1500 or even 2000 cycles if the cell is never discharged below 50% capacity. Thus recharging the batteries in one's pocket calculator every week, although it may only be necessary to do so every fortnight, could mean that a single set of batteries will last not five, but seven to ten years. On the other hand, radio modellers using nicads at high rates of discharge and then fast recharging them from a car battery cannot reckon with cycle lives much over 100. In other words, the useful life of nicad cells varies considerably with the operating conditions and recharge rates.

Precautions to ensure a long operating life

1) Never solder direct to the terminals of the battery (unless solder tags are provided)
2) Take care when charging cells at low temperatures. Cells which are used out of doors during the winter should first be warmed to room temperature before being recharged. Avoid charging and discharging at high temperatures, and under no circumstances exceed the prescribed temperature range.
3) At all costs avoid short circuits and over-discharging at high current rates. In general completely discharging cells should be avoided.
4) Never leave cells on continuous overcharge at greater than their normal charging current (1/10 nominal capacity).
5) Recharge new cells before use.
6) When charging a number of cells, always connect them in series, *never in parallel.* Alternatively, charge them one at a time.
7) Avoid connecting the cells the wrong way round (reversed polarity) when charging or discharging.
8) *Never* open or throw nicad cells into the fire. Take care if cells are physically damaged – cadmium is toxic and the electrolyte in the cell is highly corrosive.
9) Take note of the manufacturer's recommendations.

Hopefully, the above article has succeeded in shedding a little light on the topic of nicad cells, and has shown that there are many applications where their high rates of charge and discharge, allied to their ability to be used again and again, make them a highly attractive proposition.

Literature:

Ever Ready: 'Nickel Cadmium, Engineering Data' Ever Ready (Special Batteries) Limited, Hockley, Essex, Dec. 76.

General Electric: 'Nickel-Cadmium Akkumulatoren', Anwendungstechnisches Handbuch, 2. Ausgabe 1978, General Electric Plastics Ltd., Batteries Division, Eisenstr. 5, 609 Rüsselsheim.

SAFT: 'Gasdichte Nickel-Cadmium Akkumulatoren', published by F. Brück and F. Putois, S.A.F.T. Accumulators and Batteries Ltd., 605 Offenbach/Main Kaiserleistr. 44.

Sanyo: Rechargeable CADNICA Battery Engineering Handbook, Sanyo Electric Trading Co. Ltd., Osaka, Japan 1976.

Varta: 'Gasdichte Nickel-Cadmium-Akkumulatoren, Hinweise für die Projektierung', Publ. Nr. 54007, Varta Batterie AG, Am Leineufer 51, 3000 Hannover 21.

NEW PRODUCTS

Calibration Meter

Arun Electronics offers Digital Source Meter for calibration of temperature and other process instruments. Four models are available covering the ranges from 0.1 mV to 20 V DC and 0.1 uA to 20 mA DC with either 3-½ or 4-½ digital display. Model SSM IV has rationalised control, and one pair of terminals each for source and one pair for the meter. This instrument not only simulates the thermocouple outputs from 0 mV to 200 mV DC but also offers measurement of outside input on digital display with an accuracy ± 0.01%. The SSM IV has 4-½ digits display 200 mV, 2 V, 20 V ranges and current range 0-200 uA, 0.2 mA and 20 mA continuously adjustable. This meter is available for mains operation, i.e. 230 V ± 10%; it can also be supplied for battery operation.

M/s. Arun Electronics Pvt. Ltd. • B/125-126 Ansa Industrial Estate • Sakivihar Road • Sakinaka • Bombay-400 072.

Temperature Guage

OPTEX CO. LTD., Japan offers a non-contact temperature measurement device. With addition of this model, the non-contact temperature measurement equipments that OPTEX now offer ranges from as low as -50°c to as high as 2100°c with a resolution of 1°c. Models of VF series have a single lens reflex type of view finder with a built in filter for protecting operator's eyes.

This device measures temperatures as high as 2100°c, making it to measure temperatures of Ceramics, molten metal like steel, Aluminium etc.

the response time is reported to be 0.02 seconds for measurement.

It can optionally be attached with a digital printer for permanent record of the temperature measured.

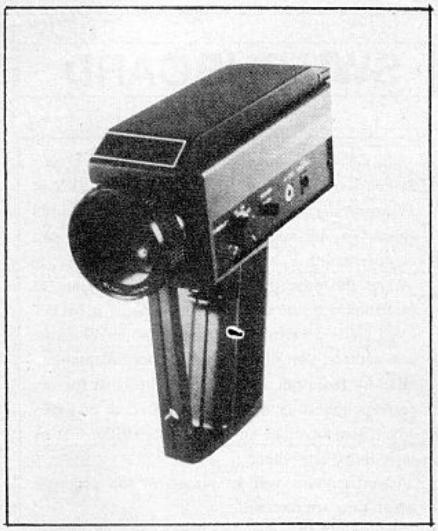

M/s. MECORD MARKETING PVT. LTD. • 304, Hill View Industrial Estate • Ghatkopar (West) • Bombay-400 086.

PLA General Purpose Relay Series "H"

PLA introduces series "H" general purpose Relay 10Amps. resistive at 23VDC/250VAG Available in enclosed solder version and enclosed Plug-in version with 1C/O, 2C/O, 3C/O, contacts, with coils suitable for 6 to 240V AC/DC. It is suitable for low and medium power sources.

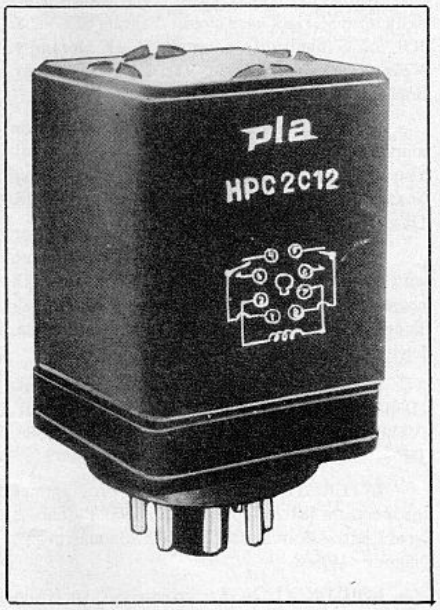

M/s. Sai Electronics • (A Divn. of Starch & Allied Industries) • Thakor Estate • Kurla Kirol Road • Vidyavihar (West) • Bombay-400 086 • Ph: 5136601/5113094/5113095.

Single Phasing Preventer

Gelco Single Phasing Preventer (NSV Type) protects three phase Ac induction motors. The unit is designed to give adequate protection against single Phasing unbalance supply and to low & to high voltage. In case of wrong phase sequence, the motor Automatically gets Switched-off. Thus preventing rotation of the motor in reverse direction. Delay of approx. 3 seconds is provided of the motor in reverse momentary voltage fluctuations model NSV-C is available with low/High Voltage cut-off and model NSV-W is without low high voltage cut-off. Operating voltage is 415V, 50Hz & relay contact rating is 6 Amp at 240V or 2 AmpAt 415V. The unit is suitable for motor of any HP rating.

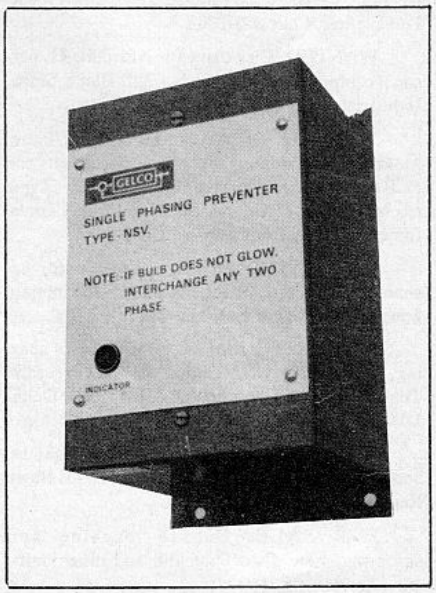

M/s. Gujarat Electronics & Controls • 9, Advani Market • Outside Delhi Gate • Ahmedabad-380 004.

NEW PRODUCTS

DPM

CLASSIC ELECTRONICS Offers DPM's. These have 31/2 digits, 12.5 mm LED/LCD display and operate on ± 5V/9V.D.C. power supply. Range of DPM's is 200 mv/2v/20 V.D.C. voltage or any other linear parameter. Over range indication, auto polarity, auto zero & external decimal selection is also provided. These have high accuracy of ± 0.1% ± one digit.

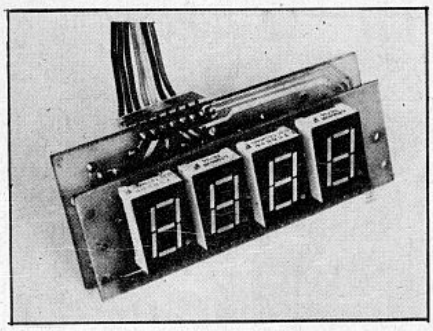

CLASSIC ELECTRONICS • 28/2, DLF Industrial Estate – I • Faridabad 121 003 • Tel: 82-57203.

PRINTER

ATCO has developed a Printer that is compatible with most of the ATCO weighing systems.

The printer is typically in use in industries where manual entering of recorded weighing is difficult.

The Printer also provides the net/tare weight of material and total weight of the batch.

The hardware provided in the unit is from the world leaders EPSON, while the software is indegenously developed by ATCO.

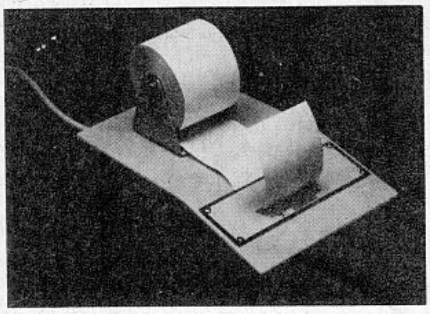

ATCO INDUSTRIES LIMITED • 6-A, Lalwani Industrial Estate, • 14, G.D. Ambekar Road • Wadala • Bombay 400 031 • Tel: 4121982/4121295/ 4121298/4122258. Tlx: 011-73944 ATCO IN. • Fax: (022) 414 0250

SAFETY GUARD

This Safety Guard works on Infra-red principles and is designed to ensure safety in dangerous operating areas on automatic machines, power presses, shears, bending machines etc. It consists of a set of parallel beam infra-red transmitter & receiver which form an invisible curtain in-between the operator and the machine. When the beam is interrupted it is sensed and the machine is stopped immediately. Various models are available from covering height of 100 mm to 1000 mm and upto range of 4000 mm.

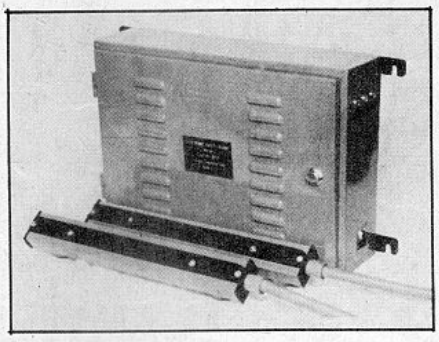

ELECTRO-ARTS • 4 Vaishali • Gangapur Road • Nashik 422 005 • Tel: 0253-78452

INSULATION TESTER

The protective-wire – and insulation testing device PI 50U1A is housed in a 19" – plug-in unit.

For the protective-wire test, a test current can be sent between 5A and 30A. The measuring technique is completed by two ranges, which have a final value of 0.2 ohm and 2 ohm, with an adjustable limit value as well as pilot lights and a buzzer for error messages. The combined device also has a system of measurements for testing insulation resistance two ranges (5 MOhm and 50 OHm) with the corresponding limit value are available at a test voltage of 500 VDC. An evaluation via error lights and a buzzer are also available here. Both tests can be started individually or perallel with a built-in time base via the protective-wire test point PE 14. There is a floating computer interface for further evaluations. Over and above that, the device is supplied in a special, system-compatible version.

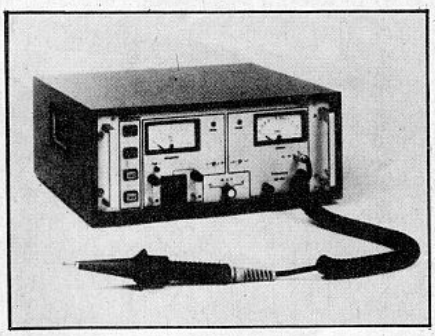

SPS ELECTRONIC • Steuerungs und Prüfsysteme GmbH, Blätteräcker 18 7170 Schwäb Hall – Sulzdorf • Tel: 07907/7005 or 878-0 Schwäbisch

PRINTER STAND

INTERPLAST SERVICES have developed Printer Stands for computer systems. These stands do not require any screwing or fixing. They can be used for both 132 coloumn and 80 coloumn printers of any make. It does not appreciably increase the level of the printer which makes it remain within the normal line of vision.

These Printer Stands are marketed under the brand name of "PRISM"

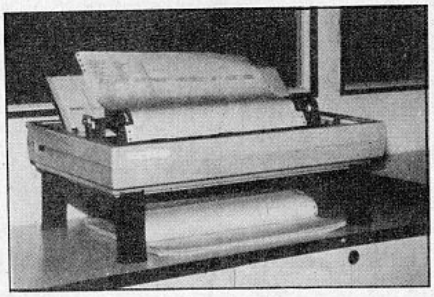

INTERPLAST SERVICES • A-42, Nandkishore Industrial Estate • Off. Mahakali Caves Rd. • Andheri (East) • Bombay 400 093. Tel: 6300812.

NEW PRODUCTS

ELECTRONIC BALLAST

Professional Lighting has introduced Electrolast high frequency electronic Ballasts for the complete range of flourescent tubes.

Electrolast PEB-240 is a single ballast to light up 2 x 36/40 W Flourescent tubes. Some of the features claimed are:

1. Saves upto 35% of Electricity.
2. Lights up instantaniously i.e. no flickering, no starter required.
3. Operating Voltage is 90 Volt to 300 Volts.
4. Function even at low temperature upto 10 deg. C.
5. Has internal fuse protection.
6. Light weight only 150 gms as compared 600 gms of a conventional choke.
7. Same size and same mounting holes so on new holes are to be made for installation.
8. Improve Power Factor.
9. Reduce Air-Conditioning Cost due to low temperature rise.
10. No noise i.e humfree.

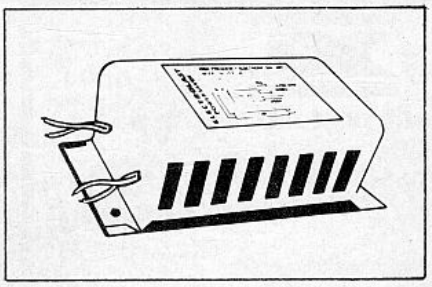

PROFESSIONAL LIGHTING INDUSTRIES, • 25, Singh Industrial Estate, • No. 3, Ram Mandir Road • Goregaon (West) • Bombay 400 104 • Tel: 6723521.

CABLE FAULT LOCATOR

M/s. ANDO ELECTRIC CO., of JAPAN offers Model AD-6202 Cable fault locator. The AD-6202 is a pulse echo type cable fault locator designed to locate faults such as disconnections, gaps, multi-connections, water absorption and grounding in paper/plastic insulated cable. Coaxial cable and paired cables. It is also capable of measuring crosstalk in these cables. Other features include 1) Digital display of distance or time, 2) Built-in balancing circuits, 3) Operation with rechargeable Ni-Cd battery and built-in battery power consumption indicator. The AD-6202 is portable and ideal for field use.

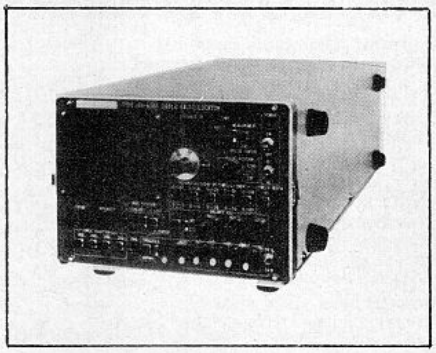

M/S. MURUGAPPA ELECTRONICS LTD. • Agency Division • 29 IInd Street • Kamaraj Avenue • Adyar • Madras 600 020 • Tel: 413387, 410795, 416653

VINYL HOSES

Parmyflex Flexible Vinyl Hoses are reinforced with high tensils steel wire to ensure high resistance to crushing or development of "Kinks", for varied applications.

The hoses are available in TYPE SF with inside diameter sizes of 10, 15, 20, 25, 30, 40 50 and 60 mm for medium duty application and TYPE MSF in 60, 70, 75, 100, 125, 150 and 200 mm for heavy duty applications. Other sizes can be custom made aganist specific orders. End fittings are also available.

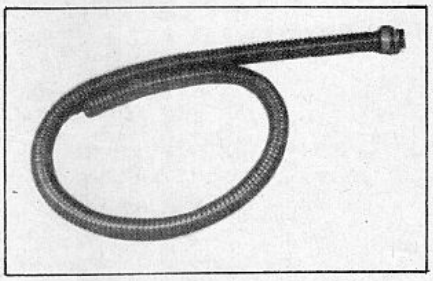

UDEY CABLES • Dina Building • 53, M. Karve Road, Bombay 400 002. • Tel: 314622/310870.

3 CHANNEL SCOPE

Scientific's new HM 1005 is a multifunction 100 MHz Oscilloscope packed with features such as true 3-Channel operation and a genuine second time based with a separate second trigger facility. Upto 6 traces can be displayed using the alternating time base mode and all three input channels. The second trigger facility provides for stable viewing of troublesome asynchronous signals. HM 1005 utilises very sensitive comparators for reliable triggering beyond 130 Mhz for signal levels as low as 1 division.

Another new feature on HM 1005 is the easy to read 3-digit LED delay time multiplier for accurate measurements.

A user selectable X10 magnifier extends the maximum sweep to 5 ns/division.

An active TV Sync Separator extracts clean, field and line Sync pulses to ensure a high degree of display stability when observing composite video signals.

The built in delay line permits the viewing of leading edge and the over screen feature indicates if any part of the trace passes beyond the graticule limit of the CRT screen.

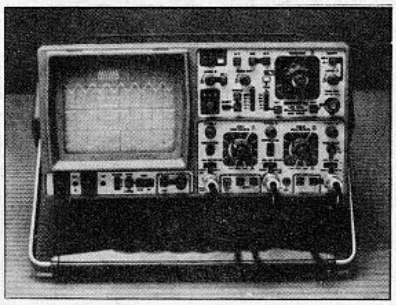

SCIENTIFIC MES-TECHNIK PVT. LTD. • B-14, Industrial Estate, Pologround • Indore 452 003. (M.P.)

MULTI-CHANNEL VIBRATION MEASUREMENT SYSTEM

Rion Co. Ltd. Japan has introduced a multichannel vibration measurement system that is completely portable.

It can start with a less number of channels and can upgraded to 16 channels. It accepts inputs either from a pre-amplifier or an acclerometer directly. It can have an indicating unit built in the same rack or an A.C. output can be taken to a recorder or other recording equipments.

It has a wide frequency characteristics from 0.5 to 100,000 Hz. The measurement of Aceleration, Velocity, and Displacement over a wide range is possible.

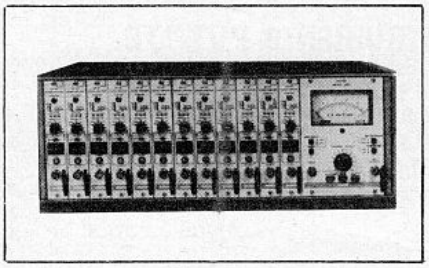

Mecord Marketing Pvt. Ltd. • 304, Hill View Industrial Estate • Ghatkopar West • Bombay 400 086. • Telex: 011-75146 NENC/11-72132 PLA • Fax: 022-8122458

HELIPOT

'PAVAN' 23 mm Die Meter 10 Turns Wire Wound Potentiometers are designed & manufactured to meet applications in different fields from computers to Industrial Electrical Equipments and Instruments etc.

These are 3 watt 10 Turns Wire Wound Potentiometers in Resistance range 100 ohms to 50K ohms, Resistance tolerance –5% or –3% linearity – 0.5% and – 0.25%.

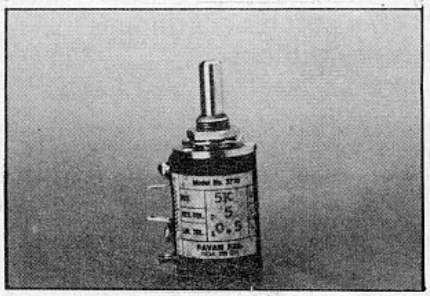

These have low temperature co-efficient resistance wire, specially selected contact material, Gold plated terminals, chrome plated brass bush & shaft. Also available in 3 turns & 5 turns.

PAVAN INDUSTRIES • Post Box No. 162 • Valsad 396 001. Gujarat.

INSTRUMENT TROLLEY

President Group have introduced two Trolleys for Instruments. The frame for the trolley is made from aluminium sections. The upper tray is tiltable and the viewing angle can be changed. A drawer for cables, connectors probes and other small items is provided below the top tray. The aluminium frame is anodised natural finish while the other parts are painted in blue.

PRESIDENT MARKETING SERVICES • Post Box No. 9442 • Andheri (East) • Bombay 400 093.

CARD FOR XENIX/UNIX

The MTS 8903 Four Port Serial card is an interface to connect upto 4 terminals to any IBM PC/AT286/AT386 compatible systems running under XENIX/UNIX operating systems. This can be further extended to 8 terminals by using another MTS 8903. The MTS 8903 has four RS 232-C asynchronous serial ports. The card 1/0 address and the interrupts are selectable. Additionally, two of the ports can be configured as standard PC serial ports (COM1 and COM2).

The MTS 8903 can also be used under MS-D05 with the support of a simple device driver to perform file transfer and device sharing between 4 PC/XT/At and a central host computer (PC/XT/AT).

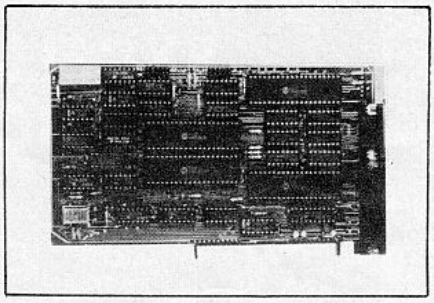

MEGA TROMECH SYSTEMS (P) LTD. • 24, 12th Main, 1st Block Rajajinagar, Bangalore-560 010. • Tel: 323054.

INSULATION TESTER

The 'MECO' Model DIT-90, multirange Digital Insulation Tester is a portable instrument, fully battery operated unit two Mehohm ranges – 200 MOhms/500V and 1000 MOhms/1000V. It also has a 200 Ohms range to check low resistance continuity of circuits like meter windings, etc.

Applied terminal voltage is within ± 10% of the rated voltage for the scale mark of infinity, and more than 90% of the rated voltage from 2% to 100% of reading.

MECO INSTRUMENTS PVT. LTD. • Bharat Industrial Estate • T. J. Road, Sewree • BOMBAY-400 015.

classified ads

Available:- PCB Circuit diagram and components of 1) Stereo tape deck with DBX noise reduction, variable AC Bias, National Ferriechrome, Chrome, Metal, LED VU meters Phones. S/n ratio = 120 db, 10 Hz to 22 Khz Rs 1800/- 2) IC LMI 818 Stereo tape deck with noise reduction, LN Cr 02, metal Rs 700/- Write with S.A.S.E. to ERICTRONIC C/o Eric Fernandes, Rose Blossom Building C-26 Sitla Devi, Mahim, Bombay-400 016

CORRECTIONS

DC-AC converter

August 1989 page 8-46

Only when used in conjunction with the external timebase circuit, the 4047 in the converter supplies an output signal with a duty factor other than 0.5. This causes the primary transformer winding to become saturated, and the dissipation in the power transistors to rise to uncontrollable levels. To prevent this happening, fit wire links 2–3 and 4–5 to keep the 4047 operating in the astable mode. Connect pin 2 of the timebase circuit (100 Hz signal) to pin 3 of the 4047 via a 10 kΩ resistor. Remove R_1 and C_1 from the main converter board.

Attention: none of the above changes applies to the free-running version of the power converter.

Simple AC millivolt meter

February 1989 page 2-18

In the circuit diagram, Fig. 1, the voltage shown at the base of T_5 is measured with respect to the positive supply rail.

Dark-room clock

March 1990 page 3-49

The value of R_{17} (1 kΩ) is best increased to 10 kΩ to prevent T_6 overloading the Q13 output of IC_1, which may cause erroneous clocking of IC_1.

In Fig. 4, pin 9 of IC_1 should also be circled to indicate that a through-contact wire must be fitted in the relevant PCB hole.

Vocal eliminator

September 1989 page 9.51

Pins 5 (+input) and pin 6 (−input) of opamp A_2 must be transposed in the circuit diagram.

Voice recorder from Texas Instruments

July 1989 page 7-43

The supply voltage pin numbers of IC_2, IC_3 and IC_4 are given incorrectly in the circuit diagram in Fig 6.

Pins 18 of IC_2 and IC_3, and pin 4 of IC_4, must be connected to ground. Pins 9 of IC_2 and IC_3, and pin 8 of IC_4, must be connected to +5 V.

elektor INDIA Subscription Order

Name

Address

Pin Code

advertisers' index

ACCRAPAC	4.06
ADVANCED VIDEO LAB	4.04
COMTECH	4.04
CYCLO COMPUTERS	4.10
ECONOMIC ENGINEERING	4.04
ELTEK BOOKS N KITS	4.06
EXCEL ELECTRONICS	4.61
GRAPHICA DISPLAY	4.08
G. S. ELECTRONICS	4.08
IMS INTERNATIONAL	4.10
KAYSONS RADIOS	4.10
KELTRON	4.11
LEADER ELECTRONICS	4.08
MECO INSTRUMENTS	4.63
OSWAL ELECTRONICS	4.61
PEC MADRAS	4.59
PHILIPS	4.07
PIONEER ELECTRONICS	4.06
SOLDRON	4.06
TANTIA ELECTRONICS	4.10
VASAVI ELECTRONICS	4.04
VISHA ELECTRONICS	4.09

Printer & Publisher – C.K. Chandarana, 2, Koumari, 14th A Road, Khar, Bombay 400 052.
Printed at Trupti Offset, 103 Vasan Udyog Bhavan, Tulsi Pipe Road, Lower Parel, Bombay 400 013.

R. N. No. 39881/83

Allowed to post without prepayment. LIC No. 91

MH BY WEST-228
LIC No. 91

HOW TO KEEP INDUSTRIAL TEMPERATURES FROM RISING!

WITH AFCOSET HEATSINKS.

The widest range of Heatsinks on the Indian industrial electronic circuit comes from Afcoset. And it comes in consistently superior quality.

Besides, progressive research allows Afcoset to custom-build Heatsinks to your specific requirements.

So if you're looking for high thermal efficiency, make contact with Afcoset.

Afcoset
COMPONENTS

AFCO INDUSTRIAL & CHEMICALS LTD.
Kanjur Marg (East), Bombay 400 078 Tel : 589651 (5 Lines) Tlx : 71478 BBTC IN FAX : (022) 2047612

SEASONS/AIC 450